SHIRE OF WOODANILLING

ATTACHMENT BOOKLET FOR

ORDINARY COUNCIL MEETING

15 April 2025 at 4.00pm

INDEX

11.1.1 Application for Planning Approval

11.1.2 Local Planning Policy No. 2 Sheds/Outbuildings

12.1.1 Quote Izuzu Vehicle Purchase

12.1.2 Quote Izuzu Vehicle Purchase

13.1.1 List of Accounts for Payment – 31 March 2025

13.2.1 Monthly Financial Report 31 March 2025

Attachment 11.1.1

Shire of Woodanilling

APPLICATION FOR PLANNING APPROVAL

Planning and Development (Local Planning Schemes) Regulations 2015
Application for Development Approval

OWNER DETAILS		
Name: [redacted]		
ABN (if applicable):		
Address: [redacted]		
Work No:	Home:	Mobile [redacted]
Email: [redacted]		
Contact person for correspondence: [redacted]		
Signature: [redacted]	Date: 7/02/2025	
Signature:	Date:	
The signature of the owner(s) is required on all applications. This application will not proceed without that signature. For the purposes of signing this application an owner includes the persons referred to in the Planning and Development (Local Planning Schemes) Regulations 2015 Schedule 2 clause 62(2).		
APPLICANT DETAILS (IF DIFFERENT FROM OWNER)		
Name:		
Address:		
Work No:	Home No:	Mobile:
Email:		
Contact person for correspondence:		
The information and plans provided with this application may be made available by the local government for public viewing in connection with the application.		☐ Yes ☐ No
Signature:	Date:	
PROPERTY DETAILS		
Lot No: 300	House/Street No:	Location No:
Diagram or Plan No: 223226	Certificate of Title Vol. No: 1229	Folio: 268
Title encumbrances (e.g. easements, restrictive covenants):		
Street name: NORRISH ROAD	Suburb: WOODANILLING 6316	
Nearest street intersection:		

Shire of Woodanilling

PROPOSED DEVELOPMENT	
Nature of development:	☐ Works ☒ Use ☐ Works and Use
Is an exemption from development claimed for part of the development? ☐ Yes	☒ No ? ☐ Works ☐ Use
Description of proposed works and/or land use:	PRIVATE / STORAGE
Description of exemption claimed (if relevant):	
Nature of any existing buildings and/or land use:	NIL
Approximate cost of proposed development:	$ 65,621.00
Estimated time of completion:	20/03/2025

OFFICE USE ONLY	
Acceptance Officer's initials:	Date received:
Local government reference No:	

GENERAL INFORMATION & CHECKLIST

The Shire of Woodanilling Town Planning Scheme No. 1 requires appropriate information to accompany every application for planning approval. This checklist sets out the minimum required information for an application to be considered complete.

All applications should include enough information to enable Shire staff to ensure compliance with TPS1 and Local Planning Policies. Variations to R-Codes will require performance criteria to be addressed.

If the proposal is required to be advertised or notified in accordance with TPS 1, the application will attract an additional fee. You will be advised of this requirement and invoiced in accordance with the Shire's Fees and Charges prior to any advertising taking place.

ALL APPLICATIONS SHALL BE ACCOMPANIED BY:

- Application form fully completed and signed by all landowners where applicable.
- Cover letter providing details of proposed development (as described above).
- Planning Fee - due on lodgement – please contact 08 9823 1506 for advice regarding fees payable)
- Copy of current Certificate of Title.

For use when lodging an application to the Chief Health Officer ONLY

PAYMENT FORM
FOR THE APPLICATION TO INSTALL OR CONSTRUCT AN APPARATUS FOR THE TREATMENT OF SEWAGE

Application Fee $79.00

Applicant's Name / organisation

ROBERT PETERS

Address and location of wastewater system

LOT 300 NORRISH ROAD
WOODANILLING WA
6316

Return postal address for receipt to be sent:

Cardholders name: ROBERT N PETERS

Address: WOODANILLING CARAVAN PARK

Suburb: WOODANILLING Post Code: 6316

Your return e-mail: rnp.1710@gmail.com

Payments by credit card: Fill in credit card details below

Card Type:
☐ Mastercard ☒ Visa

Credit Card Number

4	6	2	2	3	9	1	1	0	6	5	9	5	9	7	1

Expiry Date

1	1	2	6

HEALTH (MISCELLANEOUS PROVISIONS) ACT 1911
HEALTH (TREATMENT OF SEWAGE AND DISPOSAL OF EFFLUENT AND LIQUID WASTE) REGULATIONS 1974

APPLICATION TO CONSTRUCT OR INSTALL AN APPARATUS FOR THE TREATMENT OF SEWAGE

1. Application Details

Read the application instructions in Appendix 1 before filling in this form.
Referring to Figure 1 in the Appendix 1, this is an application to the:

☐ Local Government ➔ Go to Section 2

☐ Chief Health Officer ➔ **Receipt number required** for the payment of $79.00 **BEFORE** this application is forwarded to the Department of Health WA. Refer to Appendix 2 for payment instructions.

Receipt Number for the payment of $79.00:
Note: Applications without a receipt number will be returned to applicant.

Complete Section 2 AND Section 3

2. Location of System

Lot Number	300	House Number	
Street Name	NORRISH Rd		
Town or Suburb	WOODANILLING 6316.		
Nearest crossroad			
Local Government (City/Town/Shire)	WOODANILLING		
Minesite (Include Minesite name, GPS coordinates and sub-locations)	(If applicable)		

3. Owner / Applicant Details

Owner's Name	ROBERT N PETERS.		
Applicant's Name	ROBERT N PETERS		
Applicant's Postal Address	PO BOX 26		
Suburb	WOODANILLING	Postcode	6316
Applicant's Phone Number	04 38 99 3660		
Applicant's Email Address	rnp. 1710 @ gmail.com		

Go to Section 4

4. Premises Details

☐ Residential Premises ➔ Go to Section 4.1

☐ Non-Residential Premises ➔ Go to Section 4.2

4.1 Residential Premises

- Number of bedrooms 0 ▪ Number of persons on premises 1
- Number of other dwellings on the lot 0
- Is this an ancillary accommodation? ☒ No ☐ Yes ➔ LG Planning approval required
- Spa(s) on premises? ☒ No ☐ Yes: Volume Litres
- Note:

Go to Section 5

4.2 Non-Residential Premises

- Please give details of the premises and the nature of use. STORAGE OF PERSONAL ITEMS
  I HAVE A LARGE MOTORHOME THAT WILL BE STORED INSIDE THE SHED WHEN I AM NOT IN THE AREA. AS WELL AS A ~~SECO~~ THIRD VEHICLE
  I INTEND TO TRAVEL OFTEN IN THE MOTOR HOME
- Public buildings - please detail the licensed maximum occupancy rate: 0 persons
- Number of persons on premises and **AND** any other volumes of liquid waste generated onsite:

  1 PERSON - APROX 30 TO 40 LITRES A DAY WHEN PRESENT ON THE PROPERTY

  Please refer to DOH factsheet: "*Supplement to Regulation 29 – Wastewater system loading rates*" for requirements and details on calculating daily wastewater volumes.

- Expected Daily Wastewater Volume: 35/40 Litres / Day
- Note:

Go to Section 5

5. Treatment System Details

☐ Standard Septic Tank to Leach Drains or Evaporation Ponds ➔ Go to Section 5.1

☒ Secondary Treatment System (STS, also known as ATU) -Listed on DOH website's approved list ➔ Go to Section 5.2

☐ Wastewater Treatment Plants (includes Commercial STSs) ➔ Go to Section 5.3

☒ Greywater Reuse System ➔ Go to Section 5.4

☐ Alternative Wastewater Treatment Systems ➔ Go to Section 5.5

5.1 Standard Septic Tanks to Leach Drains or Evaporation Ponds

- Septic Tank Sizes
- Septic Tank Manufacturer
- Leach Drain Lengths 1200 x 230 RADIUS - DIAGRAM SUPPLIED
- Leach Drain Manufacturer ECO FLO WASTE WATER MANAGEMENT PTY LTD
- Is it an alternating system? ☐ Yes ☐ No
- Evaporation ponds require an engineer's certification, certifying the evaporation ponds are capable of disposing the total wastewater volumes that is being fed into the ponds. Please provide details and specifications of ponds with application.

Go to Section 6

5.2 Secondary Treatment System

- Name and Model of Secondary Treatment System NL3 NATURE LOO/COMPOSTING WITH LIQUID ABSORBTION TRENCH NON CHEMICAL
- Disposal Area m²
- Disposal Method: DRIED WASTE TO BE DISPOSED AT THE WASTE MANAGEMENT FACILITY AT THE WOODANILLING CARAVAN PARK

  ☐ Surface Irrigation ☑ Subsurface Irrigation ☐ Substrata Irrigation
- Copy of maintenance agreement attached? ☐ Yes ☐ No ➔ Required.
- If leach drains are used for disposal, please complete dot point 3-5 in Section 5.1.

Go to Section 6

5.3 Wastewater Treatment Plants

- Please attach technical details and plant specifications with application. The following must be covered:
  - Capacity
  - Volume of treatment tanks
  - Buffer tank(s) volume(s)
  - Treatment train details
  - Water quality objectives
  - Maintenance
  - Alarms
  - Technical drawings of system
- Disposal Method:

☒ Surface Irrigation ☐ Subsurface Irrigation ☐ Substrata Irrigation

Disposal Area Size: m^2

☐ Evaporation ponds: require an engineer's certification, certifying the evaporation ponds are capable of disposing the total wastewater volumes that is being fed into the ponds. Please provide details and specifications of ponds with application.

- Note:

Go to Section 6

5.4 Greywater Reuse System

- Name and Model of Greywater Reuse System GREYFLOW PS AG AUTO 300W
- Disposal Method:

☒ Surface Irrigation ☐ Subsurface Irrigation ☐ Substrata Irrigation

Disposal Area Size: 400 m^2

- If leach drains are used for disposal, please complete dot point 3-5 in Section 5.1.
- Note: GREY FLOW DRIPLINE KIT - SHOWER AND WASHING ONLY

Go to Section 6

5.5 Alternative Wastewater Treatment Systems

Attach system's technical specifications from the manufacturer with application.

Go to Section 6

8. Site and soil evaluations

Where required, site and soil evaluations should be provided in accordance with AS/NZS 1547 *On-site domestic wastewater management*. The requirements of the site and soil evaluation may be varied, based on existing site information or where health or environmental impacts are considered minimal. A SSE is a written report that examines the various aspects of a site in relation to sewage collection, treatment and on-site disposal to ensure adequate management over time. For more details please refer to the Guidance on Site-and-soil evaluation for on-site sewage management.

9. Declaration and Signature of Applicant

I hereby apply as the owner, or the person authorised to act on behalf of the owner, for approval to construct or install the apparatus as referred to above. I have completed Section 1-6 of this application form and provided plans that meet the requirements detailed in Section 7.

Also attached (if required) is a local government report for an application to the Chief Health Officer.

Applicants Signature: Date: 7/02/25

Please print name: ROBERT PETERS

(If this application is to be approved by the CHO, please ensure the $79.00 application fee is paid prior to submission – Refer to Appendix 1 & 2 for further details)

Reece Australia Pty Ltd
ABN 84 004 097 090
www.reece.com.au

Quote

Attachment 11.1.1

Quote No. 440119562

Date	11/02/2025
Account No.	110
Order No.	
Job No./Name	
Sales Person	DUANE STUBBS #07
Supply Branch	Plumbing Albany #6005
Supply Branch Phone	(08) 9892 0910

[redacted]

[redacted]

Here is the quote as promised.
Sorry for the delay.

Have a great day

Duane Stubbs

Line	Product Code	Description	Qty Supplied	Price before GST	Unit	Net Price before GST	GST Amount	Total price inc GST
		****** THIS IS A QUOTATION ONLY AND IS NOT A SALE DOCUMENT *****						
1	1543465	Greyflow PS AG Auto 300w Greywater Syst	1.00	2117.65	EA	2117.65	211.77	2329.42
2	1542792	Greyflow Complete Dripline Kit	1.00	407.31	EA	407.31	40.73	448.04
		Kit Includes						
		25mm X 50m Poly Pipe						
		100 Metes Of Drip Line						
		Punch Tool						
		Fittings						
	50	Each Delivery Fee - Ground Floor Only	1.00	60.00	EA	60.00	6.00	66.00
		$66.00 Delivery Fee Will Apply						
		ON All Further Deliveries						
		Quote Expiry Date: 11/03/2025						

Delivery instructions, comments, ID.	Net total	2,584.96	258.50	2,843.46
	Delivery Fee			
	Refer Above			
	Document Total	2,584.96	258.50	2,843.46

Continued Overleaf...

Terms & Conditions In addition to any terms and conditions contained in this communication, all dealings with Reece Australia Pty Ltd, of any nature whatsoever, are subject to the Terms and Conditions of Trade of Reece Australia Pty Ltd. A copy of the terms and conditions may be obtained on request at any Reece Branch and may be found on the Reece website www.reece.com.au

max™ Access your invoices online. reece.com.au/max

Attachment 11.1.1

LOCAL GOVERNMENT REPORT

(TO BE PROVIDED WHERE AN APPLICATION TO CONSTRUCT OR INSTALL AN APPARATUS IS MADE TO THE CHIEF HEALTH OFFICER, PUBLIC HEALTH)
(Local Government Use Only)

1. APPLICANT / LOCATION DETAILS

Owner's Name ROBERT PETERS Applicant's Name ROBERT PETERS

Street NORRISH Rd Town or Suburb WOODANILLING 6316

Lot or Pt. Lot No. 300 House No. Local Government.

2. SITE CONDITIONS

Nature of Soil: ☒ Sand ☐ Gravel ☐ Loam ☒ Clay

☐ Other, specify:

Depth from natural ground level to highest known permanent/seasonal or tidal water table (mm)

Distance from natural water bodies 20,000 metres ?

Will the apparatus be installed in any of the following locations:

- Within 30 m of a well, bore, watercourse, dam intended to be used for human consumption ☐ **Yes** ☒ **No**
- In an area likely to be subject to flooding or inundation in a 1:10 year return event. ☐ **Yes** ☒ **No**
- In Sewage sensitive areas? ☐ **Yes** ☒ **No**
- In Public drinking water source areas? ☐ **Yes** ☒ **No**

If yes to any of the above, describe course of action taken:

- Is the information on Section 6 of the application form correct? ☒ **Yes** ☐ **No**
- Has a DA been issued for this development? ☐ **Yes** ☒ **No**
- Are there any conditions imposed on the planning approval regarding an onsite wastewater system? ☐ **Yes** ☐ **No** ?

List the conditions:

3. RECOMMENDATIONS OF LOCAL GOVERNMENT

☐ Approval recommended (subject to the conditions listed below)
☐ Approval not recommended (reasons for refusal attached)

4. CONDITIONS OF APPROVAL

Type of Disposal System and Dimensions (if different from application form):

Other Conditions:

(Any further conditions should be attached)

Delegate of Local Government:

Local Government Approval No.: Date:

CHO approved form as per Section 4 and 4A of the Health (Treatment of Sewage and Disposal of Effluent and Liquid Waste) Regulations 1974

NL3

USER MANUAL

AUS | NZ

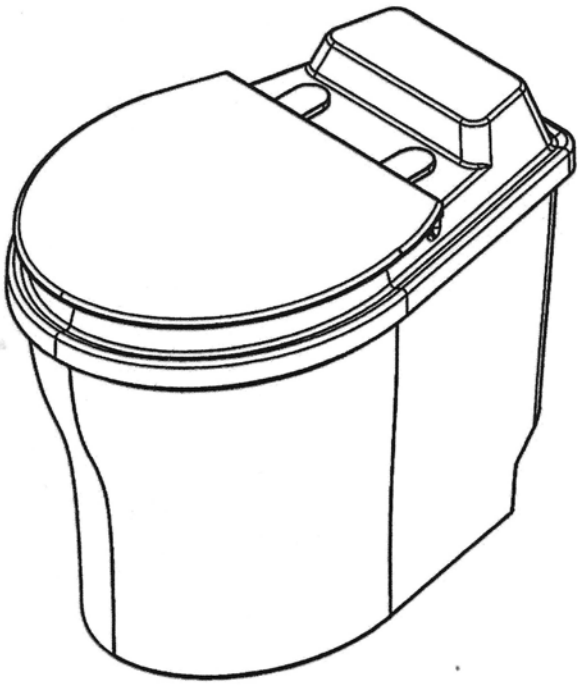

nature LOO

©Ecoflo Wastewater Management Pty Ltd

SPECIFICATIONS

Capacity:	2 person full time use
Max. Load Bearing:	130kg
Material:	LDPE
Dimensions:	620L x 395W x 500H

ELECTRICAL REQUIREMENTS

Ventilation Fan:	5W 12V DC

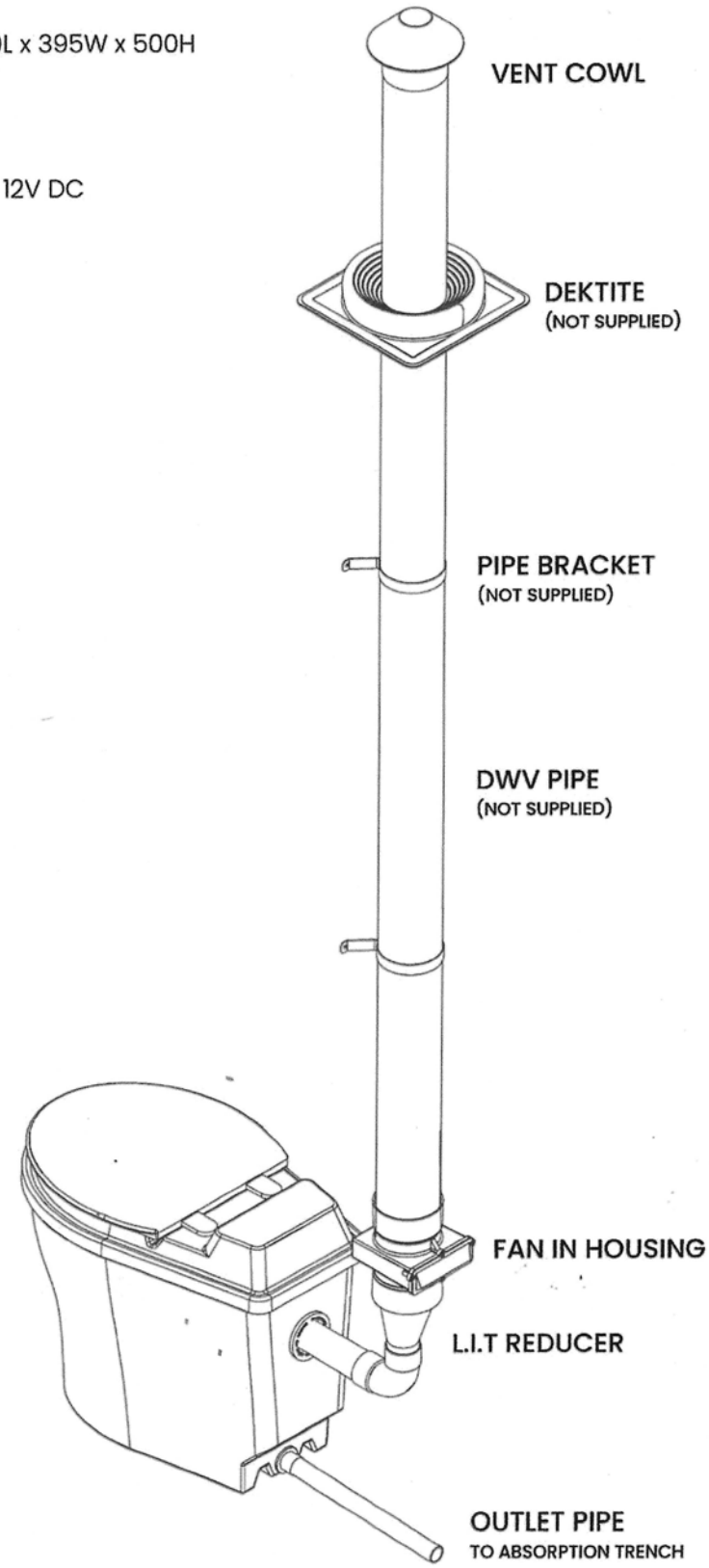

EXCESS LIQUID DRAIN

The drainage system to be chosen depends entirely on the soil condition, ground water level, and local regulations. Please ensure you choose your location with this in mind.

ABSORPTION TRENCH INSTALLATION

This is the normal method for disposal of excess liquid, but refer to council for permit for any specific requirements. These instructions apply to installation of the drain kit items available from Ecoflo.

1. Dig a trench in a position located in front of the liquid end product drain.
2. The trench is to be located in soil of good permeability and in a position where ground water will not flood the unit.
3. If there is some doubt as to the permeability of soil, extra trenching length may be required especially if a hand basin or other fittings will also drain into the same trench.
4. The liquid leaving the compost unit when in use is not expected to exceed 1 litre per day per resident.
5. In some locations it may be desirable or necessary to connect the excess liquid drain to a grey water system or an alternative disposal method complying with AS/NZS 1547:2012.
6. Trench dimensions and construction are to be in accordance with AS/NZS 1547:2012, as shown in Figure 5.

It is important to ensure that the trench is level along its length. Ensure the liquid drain pipe slopes away from the toilet and towards the trench. The trench should be protected from surface water, flooding, and vehicle traffic.

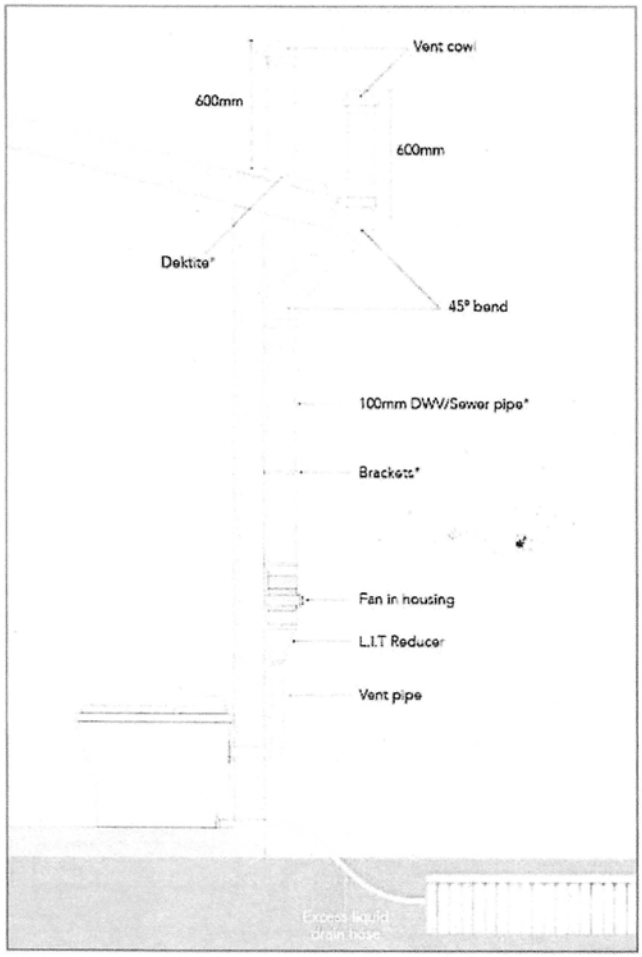

Figure 5: Trench arch (all dimensions in mm)

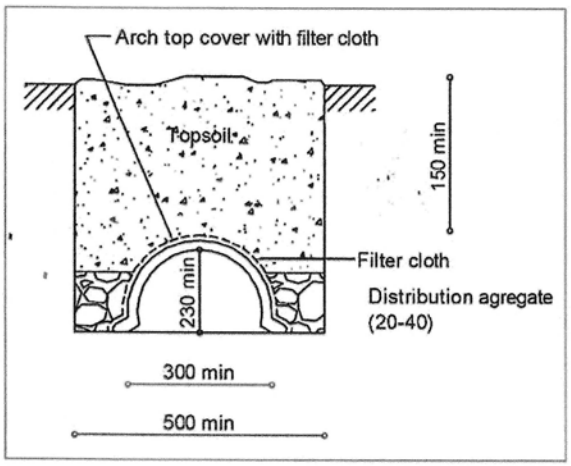

1200m long (varies depending on your local council)

TITLE NUMBER	
Volume	Folio
1229	268

WESTERN AUSTRALIA

RECORD OF CERTIFICATE OF TITLE

UNDER THE TRANSFER OF LAND ACT 1893

The person described in the first schedule is the registered proprietor of an estate in fee simple in the land described below subject to the reservations, conditions and depth limit contained in the original grant (if a grant issued) and to the limitations, interests, encumbrances and notifications shown in the second schedule.

BGRoberts
REGISTRAR OF TITLES

LAND DESCRIPTION:

LOT 300 ON DEPOSITED PLAN 223226

REGISTERED PROPRIETOR:
(FIRST SCHEDULE)

[redacted]
(T Q160303) REGISTERED 3/10/2024

LIMITATIONS, INTERESTS, ENCUMBRANCES AND NOTIFICATIONS:
(SECOND SCHEDULE)

Warning: A current search of the sketch of the land should be obtained where detail of position, dimensions or area of the lot is required. Lot as described in the land description may be a lot or location.

----------END OF CERTIFICATE OF TITLE----------

STATEMENTS:

The statements set out below are not intended to be nor should they be relied on as substitutes for inspection of the land and the relevant documents or for local government, legal, surveying or other professional advice.

SKETCH OF LAND:	1229-268 (300/DP223226)
PREVIOUS TITLE:	1229-268
PROPERTY STREET ADDRESS:	NO STREET ADDRESS INFORMATION AVAILABLE.
LOCAL GOVERNMENT AUTHORITY:	SHIRE OF WOODANILLING

17785/60

INDEXED
Many
LANDS

S. 284D.

ORIGINAL

WESTERN AUSTRALIA

INDEXED
Land
Permit
Lease
Name

REGISTER BOOK
Vol. 1229 Fol. 268

Elizabeth the Second, by the Grace of God, of the United Kingdom, Australia and Her other Realms and Territories, Queen, Head of the Commonwealth, Defender of the Faith. To all to whom these Presents shall come, GREETING: Know ye that We, of Our especial Grace, certain knowledge, and mere motion, have given and granted, and We do by these Presents, for Us, Our heirs and successors, in consideration of the payment of the sum of ---------- £10. 0. 0. ---------- and the fulfilment of the prescribed conditions to the satisfaction of Our Governor of Our State of Western Australia, Give and Grant unto

[redacted]

(hereinafter called the Grantee), the natural surface and so much of the land as is below the natural surface to a depth of ---- 200 ---- feet of ALL THAT Piece or Parcel of Land situate and being in the Town of ------- Woodanilling ------ in Our said State, containing ---------- 4 acres 1 rood 28 perches ---------- more or less and marked and distinguished in the Maps and Books of the Department of Lands and Surveys of Our said State as ---------- Woodanilling Lot 300 ---------- and as the same is delineated and coloured green in the plan drawn in the margin hereof; TOGETHER with all Appurtenances thereunto belonging, or in anywise appertaining: TO HAVE AND TO HOLD the said Piece or Parcel of Land to the depth aforesaid, and all and singular the Premises hereby granted, with their appurtenances, unto the Grantee, in fee simple; Yielding and Paying for the same to Us, Our heirs and successors, one peppercorn of yearly rent on the twenty-fifth day of March in each year, or so soon thereafter as the same shall be lawfully demanded: PROVIDED, NEVERTHELESS, that subject to section 141 of the Land Act, 1933-1958, it shall (at any time within twenty-one years from the date of these Presents) be lawful for Us, Our heirs and successors, or for any person or persons acting in that behalf by Our or their authority, to resume and enter upon possession of any part of the said Piece or Parcel of Land, which it may at any time by Us, Our heirs and successors, be deemed necessary to resume for roads, tramways, railways, and railway stations, canals, bridges, towing paths, harbour or river improvement works, drainage or irrigation works, quarries, and generally for any other works or purposes of public use, utility or convenience, and for the purpose of exercising the power to search for minerals hereinafter reserved, and such Land so resumed to hold to Us, Our heirs and successors as of Our or their former estate without making to the said Grantee, or any person claiming under him, any compensation in respect thereof; so, nevertheless, that no such resumption be made without compensation of any part of the said Piece or Parcel of Land upon which any expenditure or improvements shall have been made by the said Grantee, or any person claiming under him; and we do hereby save and reserve to Us, Our heirs and successors, all Mines of Gold, Silver, Copper, Tin, or other Metals, Ore, and Mineral, or other substances containing Metals, and all Gems or Precious Stones and Coal or Mineral Oil, and all Phosphatic Substances in or under the said Piece or Parcel of Land hereby granted, with full liberty at all times to search and dig for and carry away the same; and for that purpose to enter upon the said Piece or Parcel of land or any part thereof.

IN WITNESS whereof We have caused Our Trusty and well-beloved LIEUTENANT-GENERAL SIR CHARLES HENRY GAIRDNER, Knight Commander of the Most Distinguished Order of Saint Michael and Saint George, Knight Commander of the Royal Victorian Order, Companion of the Most Honourable Order of the Bath, Commander of the Most Excellent Order of the British Empire, Governor in and over the State of Western Australia and its Dependencies in the Commonwealth of Australia to affix to these presents the Public Seal of the said State.

Sealed this fourth *day of* May, *One thousand nine hundred and* ~~xxxx~~ sixty.

Charles Gairdner
Governor.

Grant under the Land Act, 1933-1958

Stewart Bovell
Minister for Lands.

ENTERED ON RECORD this
day of May 1960
for Minister for Lands.

CT 1229 0268 F

CERTIFICATE OF TITLE UNDER THE TRANSFER OF LAND ACT, 1893-1950

The abovenamed Grantee is now the registered proprietor of an estate in fee simple subject to the easements and encumbrances notified hereunder in all the land described in this grant.
Dated the fourth day of May, One thousand nine hundred and ~~xxxx~~ sixty.

Blackmore
ASSISTANT REGISTRAR OF TITLES.

The area and measurements on the Plan below are more or less, and a peg has been placed at each corner of the lot.

PLAN HEREIN REFERRED TO:

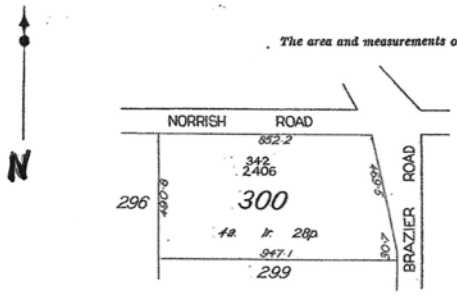

Scale : 4 chains to an inch.
Surveyed by C.E. Bowler.
Corr : 2031/09 OP Woodanilling 59/6.
Woodanilling Ex'd :

Surveyor General

Transfer B144995 to Douglas Alexander Nearsmith, Farm Worker, and Olive Marjory Nearsmith his Wife, both of Woodanilling as joint tenants. Registered 27th April 1976 at 1.51 o'c.

Transfer D70389 to Rodney Vincent Lester of 4 Lyons Close, Noranda, Lice [illegible]. Registered 18th July 1985 at 3.11 o'c.

Transfer D136194 to John Raymond Matthews, Crane Driver, and Lesley Amy Matthews, Candler, both of 74 Plover Drive, Yangebup, as joint tenants. Registered 28th October, 1985 at 12.31 o'c.

Transfer D838923 to Renato Frigeri, Construction Leading Hand and Cleone Frigeri, School Assistant both of 24 Coomoora Road, Mount Pleasant as joint tenants. Registered 8th August 1988 at 14.10 hrs.

Transfer E268951 to Joseph Louis Moschini, of 32B Mount Prospect Crescent, Maylands. Registered 4th January 1990 at 14.33 hrs.

14526/4/58—2m—17/c

For encumbrances and other matters affecting the land see back.

Superseded - Copy for Sketch Only

LANDGATE COPY OF ORIGINAL NOT TO SCALE 11/09/2024 12:45 PM Request number: 67131251
Landgate
www.landgate.wa.gov.au

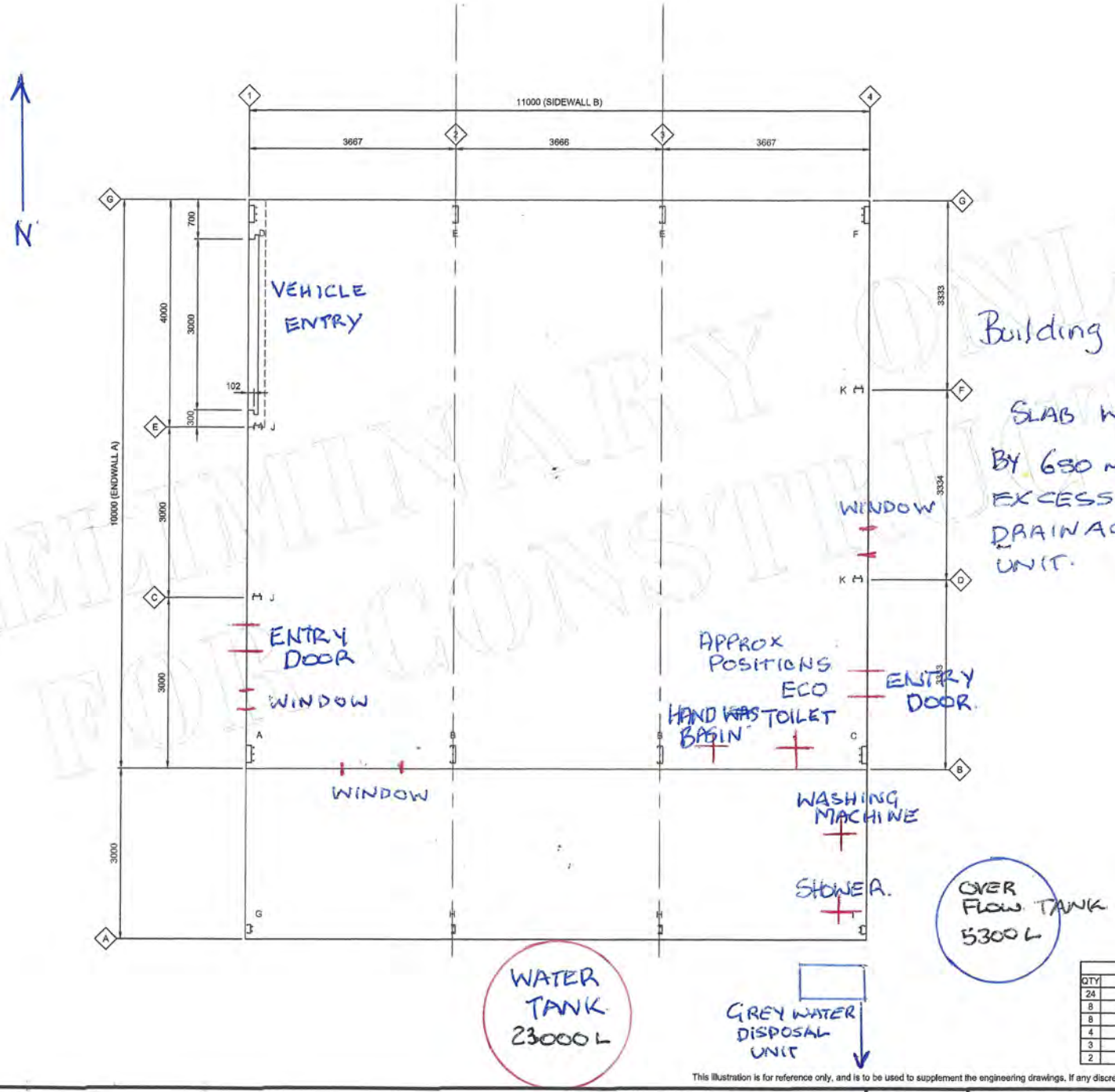

Building is 143 M²

SLAB WILL BE ELEVATED BY 650 mm TO 750 mm FOR EXCESS RAIN AND FOR DRAINAGE TO GREYWATER UNIT.

ANCHOR BOLTS		
QTY	LOCATION	DIA
24	ANCHOR BOLTS - SIDEWALL COLUMNS	16 mm
8	ANCHOR BOLTS - LEANTO A SIDEWALL COLUMNS	12 mm
8	ANCHOR BOLTS - ENDWALL COLUMNS	12 mm
4	ANCHOR BOLTS - ROLLER DOORS LARGE	16 mm
3	ANCHOR BOLTS - PA DOORS	12 mm
2	ANCHOR BOLTS - WINDOWS	12 mm

This illustration is for reference only, and is to be used to supplement the engineering drawings. If any discrepancies occur, the engineering plans will always take precedence.

Attachment

Building Layout Plan

HiTen

JOBNO HGOR98570130
SHEET 2 of 16

DATE 11-12-2024
SCALE 1:75

Attachment 11.1.1

~~Minister for Lands.~~

CERTIFICATE OF T

The abovenamed Grantee is now the registered proprietor of an esta

Dated the fourth day of May

The area and measurements o

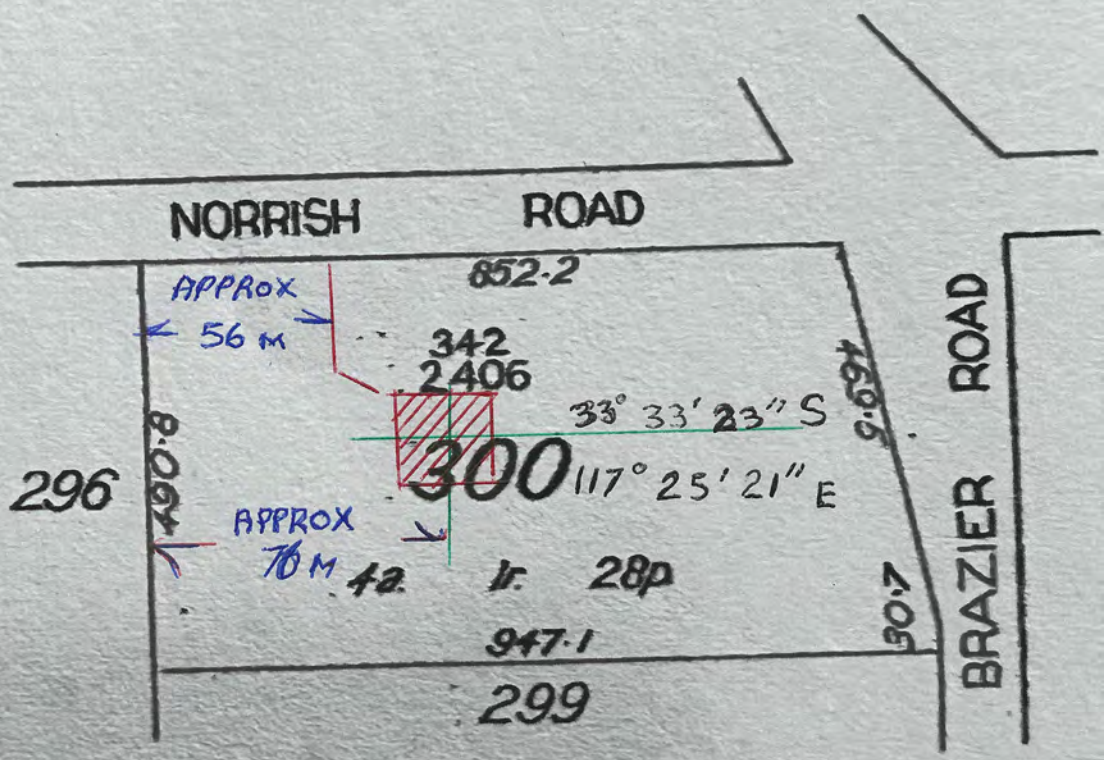

Scale : 4 chains to an inch.
Surveyed by C.E. Bowler.
Corr : 2037/09 O.P. Woodanilling 59/6.
Woodanilling Ex'd :

Surveyor General

Attachment 11.1.1

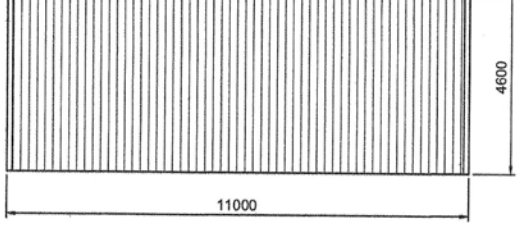

2/2 SIDEWALL B BUILDING ELEVATION

SCALE: 1:125

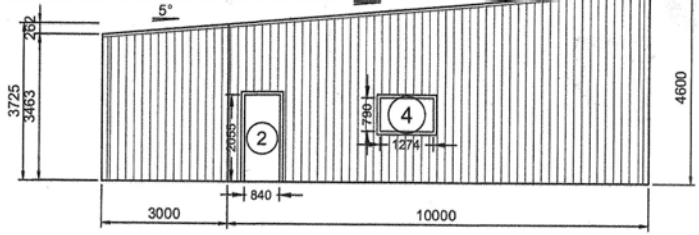

3/2 REAR BUILDING ELEVATION

SCALE: 1:125

FRAME #4

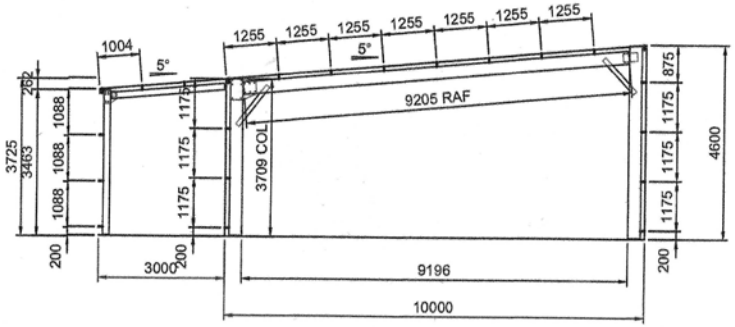

5/2 INTERNAL FRAMING ELEVATION

SCALE: 1:125

FRAMES 2, 3

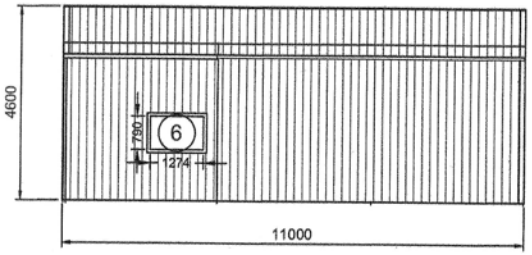

1/2 SIDEWALL A BUILDING ELEVATION

SCALE: 1:125

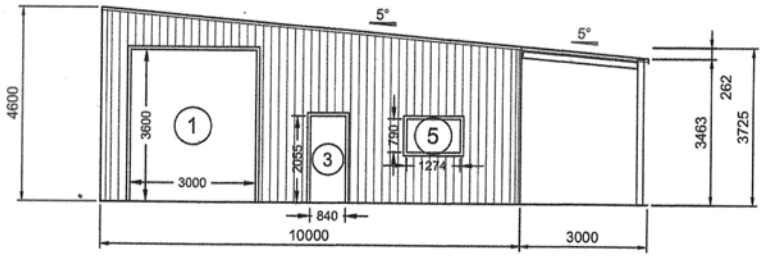

4/2 FRONT BUILDING ELEVATION

SCALE: 1:125

FRAME #1

REV	DATE	DESCRIPTION
A	28-11-2024	-

COLD FORMED BUILDINGS

ANOTHER COLD FORMED BUILDING DESIGNED BY ACT BUILDING SYSTEMS

VENN ENGINEERING

PO Box 3084
THIRROUL NSW 2515
sheds@venn.engineering
ABN 39 626 802 257

Signed ..... Date 28-11-2024

Grant J Wood MIEAust CPEng NER RPEQ

Registered EA Chartered Professional Engineer (No. 2363009)
Registered Professional Engineer QLD (No. 14384)
Registered Civil Engineer Building Practitioner VIC (No. PE0003499)
Registered Certifying Engineer (structural) NT (No. 33637IEB)
Building Services Provider (Engineer Civil) TAS (No. 6909304ES)

[redacted]

Woodanilling,
WA, 6316

DATE 28-11-2024
JOB NO. HGOR98570130
SHEET 2 of 11

Quote #98570130, 13-11-2024

Building Specifications

Building Site Address:
Great Southern Highway, Woodanilling, WA, 6316

Design Criteria:
Snow Load: N/A
Wind Load/Exposure: 37.4 m/s
Building Class: 10a
Wind Region: A1
Importance Level: 2
Terrain Category: 2.31
Shielding: 1
Topography: 1

Sheeting and Trim Details:
Roof Type: Trimclad 0.42 CB
Roof Color: Classic Cream
Wall Type: Trimclad 0.42 CB
Wall Color: Classic Cream
Gutter Type: Patio Line Gutter
Trim Color: Varies
Base Trim: None

Building Dimensions:
Width: 10.000 m
Length: 11.000 m
Eave Height: 3.725 m
Roof Pitch: Monopitch 5 deg
Sidewall Bays: 3 3.667 m
Endwall Bays: 3 Varies

Building Specs:
Columns: C30024
Rafters: C30024
Endwall Column: C15019
Roof Purlins: Z10019
Side Wall Girts: Z10012
End Wall Girts: Z10012

Leanto A Details:
Span: 3.000 m
Bays: 3
Drop: 0.000 m
Roof Pitch: 5 deg
Eave Height: 3.463 m

Leanto B Details:
Span: N/A
Bays: N/A
Drop: N/A
Roof Pitch: N/A
Eave Height: N/A

Slab and Footing Details: (Slab Details For Quoting – Not Included)
Bored Engineering plans included
Bolt Down Anchor Brackets
125mm Slab (100mm,125mm & 150mm Available)
Main Column Footings: 700 mm - 600 mm (Depth x Diameter)
End Mullion Footings: 500 mm - 600 mm (Depth x Diameter)

Attachment 11.1.1

Attachment 11.1.1

QUOTE

[redacted]

Date
15 Jan 2025

Quote Number
QU-0169

ABN
97 328 168 358

Obst Contracting Trust
93 Beaufort Street
KATANNING WA 6317
AUSTRALIA
obstcontracting@outlook.com.au
0439981122 - Travis

Description	Quantity	Unit Price	GST	Amount AUD
gravel	100.00	35.00	10%	3,500.00
skid steer	10.00	140.00	10%	1,400.00
25mpa concrete	17.00	450.00	10%	7,650.00
143m2 set up and dig footings and poor and finish	143.00	40.00	10%	5,720.00
install shed and boom lift	143.00	72.00	10%	10,296.00
mesh plstic and chars	143.00	16.00	10%	2,288.00
			Subtotal	30,854.00
			TOTAL GST 10%	3,085.40
			TOTAL AUD	**33,939.40**

Terms

Quotation Estimate valid for 21 days only.
25% Deposit required prior to ordering materials and commencing work.
Payment in full due within 7 days of invoice being sent.

STRUCTURAL GENERAL NOTES

Attachment 11.1.1

1.0 General

1.1 These drawings are
- a) Jointly owned by HiTen Buildings and Venn Engineering Pty Ltd
- b) Provided for the sole purpose of obtaining building approval and guiding construction of a single building at the job address shown in the title block
- c) Prohibited to be used for any other purpose without written authorisation from HiTen Buildings and Venn Engineering Pty Ltd.
- d) Only valid if signed by the engineer and must not be altered in any way without signed approval from the engineer.
- e) Produced to scale but dimensions shall not be obtained by measuring the drawings. All dimensions are in millimeters unless stated otherwise.

1.2 The engineer accepts no liability or responsibility for the contents of drawings that are invalid.

1.3 The word 'the engineer' used in these notes refers to an employee or nominated representative of Venn Engineering Pty Ltd.

1.4 The engineer is not the project manager or site supervisor for this project. It is the responsibility of the project manager or site supervisor in charge to ensure that the non-structural requirements of the Governing Building Code are considered and appropriately designed. This includes, but not limited to, fire & bushfire design, access requirements, future roof access requirements, lighting, glazing and electrical design, etc.

2.0 Structural Design

2.1 The structural framing components detailed in these drawings have been designed in accordance with the following documents for the design criteria detailed in these notes

Governing Building Code	2022 National Construction Code – Building Code of Australia Volume 2 and 2022 Housing Provisions Standard
Loading Standards	AS/NZS 1170.0:2002(+A5)
	AS/NZS 1170.1:2002(+A2)
	AS/NZS 1170.2:2021
Cold formed Steel member standard	AS/NZS 4600:2018

2.2 These drawings are also the limit of the Structural Design, any requirements for additional structural design of other items included in the project are specifically excluded if not shown on these drawings. This includes, but not limited to, requirements for additional loads that aren't specified including flood design loads, additional roof loads from solar panels, retaining walls required on site, driveway design etc.

2.3 These structural drawings and specifications represent the finished structure. The building is not considered complete until the installation of all components and details shown herein are installed according to the drawings.

2.4 No alterations are to be made to this structure without written approval of the engineer. This includes, but not limited to, modification to the plans and/or specifications, be the installation of additional openings, increased roof loads, skylight roof sheets or removal of cladding. If changes are made without written approval, such changes shall the legal and financial responsibility of the contractor or sub-contractors involved and it shall be their full responsibility to replace or repair the condition of the building as directed by the engineer.

3.0 Design Criteria

Building class	10a
Building Importance level	2
Wind region	A1
Terrain category	2.31
Topographic multiplier	1
Shielding multiplier	1
Ultimate design wind speed	37.4 m/s
Snow load	0.00 kPa
Allowable additional roof load	0.18 kPa (solar panels)
Slab imposed load	2.5 kPa or 9kN applied over 0.3x0.3m area (light vehicles)
Allowable bearing capacity of foundation supporting footings	100 kPa
Allowable bearing capacity of foundation supporting slab	50 kPa
Allowable skin friction of foundation	25 kPa
Soil Type	Non-aggressive (not saline or acid sulfate)

4.0 Installation Building Contractor Responsibilities

4.1 The contractor shall verify and confirm all site conditions and dimensions. Any discrepancies between drawings and site conditions shall be referred to the engineer for decision before proceeding with the work.

4.2 All workmanship and materials are to be in accordance with the Governing Building Code including all relevant Australian Standards and local statutory authorities except where varied by the contract documents.

4.3 The contractor shall be responsible for maintaining the structure in a stable condition and ensuring no part is overstressed under construction activities. They shall provide all temporary bracing, shoring or other means to avoid excessive stresses and to hold structural elements in place during erection. These temporary provisions shall remain in place until sufficient permanent members are erected to ensure the safety of partially erected structures. The contractor is responsible for meeting all laws regulating the erection of steel buildings including, but not limited to, Safe Work Australia guidelines.

4.4 The contractor shall be responsible for the location of all services in the vicinity of the works. Any services shown are provided for information only. The contractor shall confirm the location of all services prior to commencing and shall be responsible for the repair of any damage caused to services, as well as any loss incurred because of the damage to any service.

5.0 Foundation

5.1 The bearing capacity of the foundation supporting the footings and slab shall be confirmed before any concrete is placed.

5.2 No earth or debris is to fall into the footings or piers before and during placing of concrete.

5.3 All footings shall be located centrally under walls and columns unless noted otherwise.

5.4 Concrete embedment depths do not apply to locations where any uncompacted fill or disturbed ground exists or where walls of the excavation will not stand without support. Request further advice from the engineer in these circumstances.

5.5 Fill used for the support of a slab on ground shall be controlled fill or rolled fill as in accordance with clause 6.4.2 of AS 2870-2011.

5.6 Slabs less than 100sq.m in plan area are suitable for AS 2870-2011 site classes A, S & M. For larger slabs or for site classes M-D, H1, H1-D, H2, H2-D, E & E-D, the slab may experience cracking more than is considered normally acceptable. The cracking is considered of aesthetic concern only and should not effect the structural performance of the slab or shed. If this is not desired, contact the engineer for further advice.

6.0 Concrete

6.1 Concrete placement and workmanship shall be in accordance with AS 3600-2018 & AS 2870-2011.

6.2 Concrete shall be
- a) N25 with slump of 100 mm in accordance with AS 1379-2007, with 20 mm maximum nominal aggregate size and no admixtures.
- b) consolidated by mechanical vibration.
- c) Cured for a minimum of 7 days using continuous ponding with potable water.

6.3 No holes, chases or embedment of pipes other than those shown on the drawings shall be made in concrete members without prior approval of the engineer.

7.0 Reinforcement

7.1 Reinforcement shall comply with AS/NZ 4671-2019.

7.2 Reinforcement is represented diagrammatically and not necessarily shown in true projection.

7.3 Welding of reinforcement shall not be permitted without the approval of the engineer.

7.4 All reinforcement shall be securely supported in its correct position ensuring the correct cover during placing of concrete by approved bar chairs, spacers or support bars. Approved chairs include stainless steel or plastic bar chairs for bottom reinforcement and plastic tipped wire bar chairs for top reinforcement. All chairs to be spaced at maximum of 750mm centres.

7.5 Cover to reinforcment shall be:
- a) 50mm for surfaces of concrete in contact with the ground;
- b) 30mm for top surfaces of slabs fully enclosed by the building without open bays or
- c) 60mm for top surfaces of slabs more than 1 km from the coastline with open bays.
- d) For buildings with open bays within 1km of the coast, contact the engineer for cover and concrete grade requirements.

7.6 Reinforcement shall be lapped 500mm for 12mmØ bars and 800mm for 16mmØ bars.

7.7 Mesh reinforcement shall be lapped such that the two outermost wires of one sheet overlap the two outermost wires of the other sheet by 25 mm.

7.8 Hooks, bends and cogs to be in accordance with AS 3600-2018 unless noted otherwise on drawings.

8.0 Anchor Bolts

8.1 All anchors bolts shall be installed in accordance With the manufacturer's installation instructions.

8.2 Drill holes using a percussion drill (coring not permitted) to the correct hole diameter and depth as specified in the drawings.

8.3 Thoroughly clean and blow the dust out of the holes using the cleaning accessories prescribed by the manufacturer's instructions.

8.4 Substitution of anchors bolts and chemical epoxy adhesive is not permitted unless written confirmation from the engineer is provided.

8.5 For chemical anchors, ensure load is not applied to the anchors whilst epoxy adhesive is curing.

9.0 Light Gauge Cold-formed Steel

9.1 All light gauge cold-formed steel shall comply with AS 1397-2021 and be the following grades

Thickness(mm)	Steel grade (yield stress, MPa)	Protective coating (g/m2)
BMT ≤ 1.0mm	G550	Z350
1.0mm < BMT < 1.5mm	G500	Z350
1.5mm ≤ BMT ≤ 3.0mm	G450	Z350

9.2 Welding of light gauge cold-formed steel shall not be permitted.

9.3 Column and rafter members shall not be drilled or notched without prior approval of the engineer.

9.4 Round holes may be drilled through any girt or purlin member within the middle third of the depth of that member and not within 600mm of member end unless noted otherwise.

9.5 All bolts used to connect light gauge cold-formed steel members shall be
- a) Zinc coated M12 (min.) grade 4.6 snug tightened complying to AS 1111.1-2015 & AS 1112.3-2015 unless noted otherwise.
- b) Spaced no less than 3 bolt diameters between centres.
- c) Located no less than 1.5 bolt diameters from bolt centre to the end or edge of any light gauge member.

9.6 All screws used to connect light gauge cold formed steel members (excluding sheeting) shall be
- a) 10g (min.) self-drilling screws complying with AS 3566.1-2002.
- b) Corrosion resistance class 4 in accordance with AS 3566.2-2002 for buildings within 1 km from the coastline with open bays or class 3 otherwise.
- c) Spaced no less than 3 bolt diameters between centres.
- d) Located no less than 1.5 bolt diameters from bolt centre to the end or edge of any light gauge member.

10.0 Roof & Wall Sheeting

10.1 Roof & wall sheeting shall comply with AS 1397-2018 and have suitable corrosion protection complying with Table 7.2.2a of the 2022 Housing Provisions Standard.

10.2 During construction and maintenance, no foot traffic shall occur within end spans of sheeting, foot traffic shall occur
- a) Evenly across at least two ribs for corrugated profiled sheeting or
- b) In the pans for pan-type profiled sheeting.

10.3 Any roof skylights shall be approved by the engineer

10.4 Safety mesh shall be installed in accordance with the building code

11.0 Door & Window Components

11.1 Wind-locked roller doors are assumed to remain in-place and resist the ultimate limit state wind loading except for in cyclonic regions

11.2 Non-wind-locked roller doors are assumed to have failed at the ultimate limit state wind loading

11.3 Personal access doors shall be rated for the wind loading parameters stated in the design criteria (see section 3.0)

11.4 All windows shall be in accordance with AS 1288-2021 & AS 2047-2014(+A2) as appropriate for the wind loading parameters stated in the design criteria (see section 3.0)

COMPONENT DIAGRAM

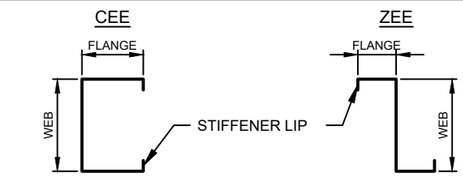

TYP. = TYPICAL U.N.O. = UNLESS NOTED OTHERWISE

REV	DATE	DESCRIPTION
A	28-11-2024	-

COLD FORMED BUILDINGS

ANOTHER COLD FORMED BUILDING DESIGNED BY ACT BUILDING SYSTEMS

VENN ENGINEERING

PO Box 3084
THIRROUL NSW 2515
sheds@venn.engineering
ABN 39 626 802 257

Signed ..... Date 28-11-2024

Grant J Wood MIEAust CPEng NER RPEQ
Registered EA Chartered Professional Engineer (No. 2383009)
Registered Professional Engineer QLD (No. 14384)
Registered Civil Engineer Building Practitioner VIC (No. PE0002499)
Registered Certifying Engineer (structural) NT (No. 306371ES)
Building Services Provider (Engineer Civil) TAS (No. 690930425)

Customer Name: [redacted]

Site Address: Great Southern Highway
Woodanilling,
WA, 6316

DATE 28-11-2024
JOB NO. HGOR98570130
SHEET 1 of 11

Attachment 11.1.1

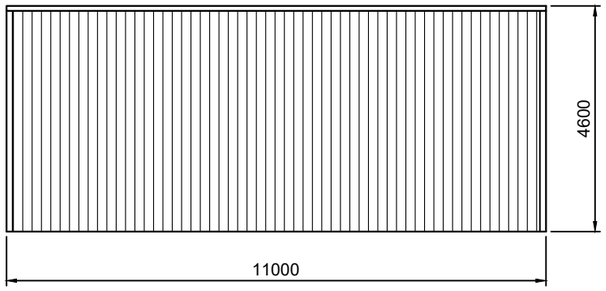

2/2 SIDEWALL B BUILDING ELEVATION

SCALE: 1:125

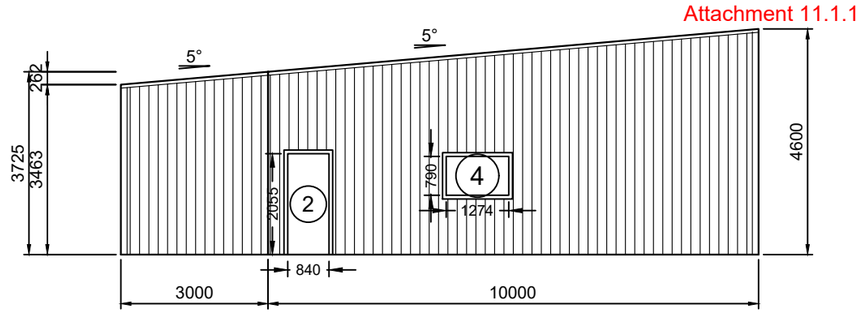

3/2 REAR BUILDING ELEVATION

SCALE: 1:125

FRAME #4

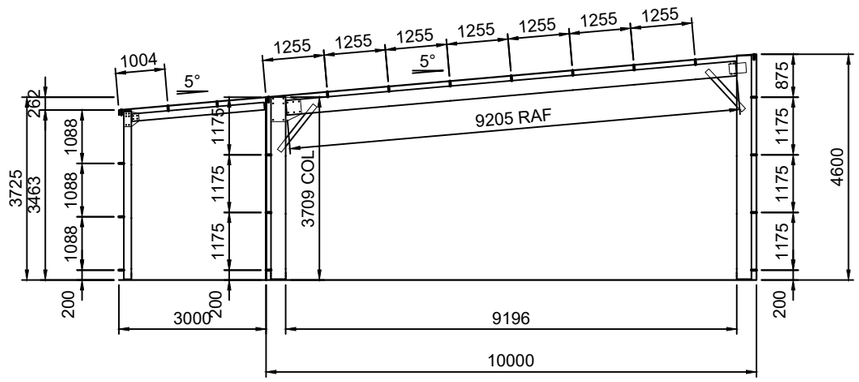

5/2 INTERNAL FRAMING ELEVATION

SCALE: 1:125

FRAMES 2, 3

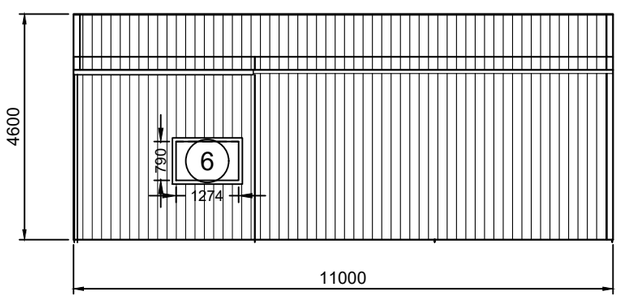

1/2 SIDEWALL A BUILDING ELEVATION

SCALE: 1:125

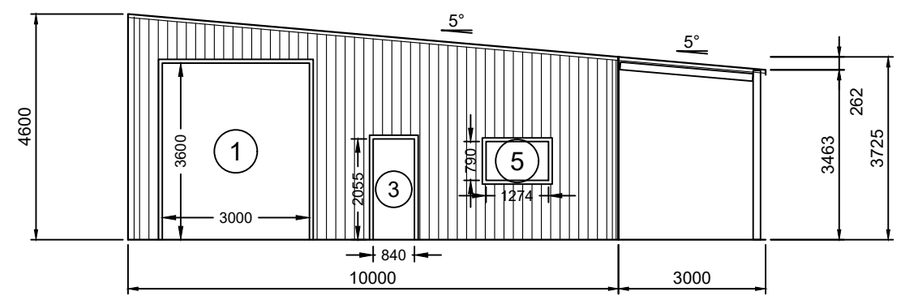

4/2 FRONT BUILDING ELEVATION

SCALE: 1:125

FRAME #1

REV	DATE	DESCRIPTION
A	28-11-2024	-

COLD FORMED BUILDINGS

ANOTHER COLD FORMED BUILDING DESIGNED BY ACT BUILDING SYSTEMS

VENN ENGINEERING

PO Box 3084
THIRROUL NSW 2515
sheds@venn.engineering
ABN 39 626 802 257

Signed ..... Date 28-11-2024

Grant J Wood MIEAust CPEng NER RPEQ
Registered EA Chartered Professional Engineer (No. 2383009)
Registered Professional Engineer QLD (No. 14384)
Registered Civil Engineer Building Practitioner VIC (No. PE0002499)
Registered Certifying Engineer (structural) NT (No. 306371ES)
Building Services Provider (Engineer Civil) TAS (No. 690930425)

Customer Name: [redacted]

Site Address: Great Southern Highway
Woodanilling,
WA, 6316

DATE 28-11-2024
JOB NO. HGOR98570130
SHEET 2 of 11

Attachment 11.1.1

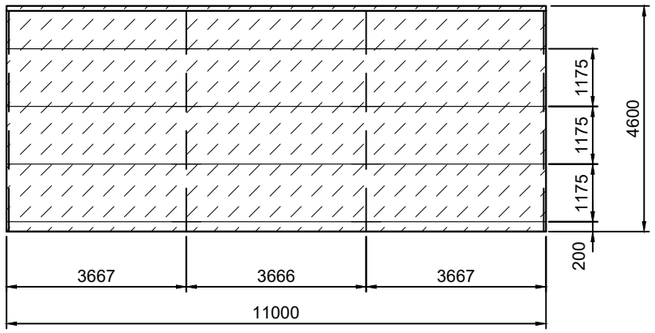

2/3 SIDEWALL B FRAMING ELEVATION

SCALE: 1:125

DIAPHRAGM SCHEDULE

SHEETING IN DIAPHRAGM SECTIONS (SHOWN AS HATCHED AREA ON ELEVATIONS) NOT TO BE CUT UNDER ANY CIRCUMSTANCES

WALL	DISTANCE FROM WALL EDGE
Leanto 'A' Sidewall	3635-11000
Sidewall 'B'	0-11000
Endwall 'B'	0-3402 4242-6633 7907-13000

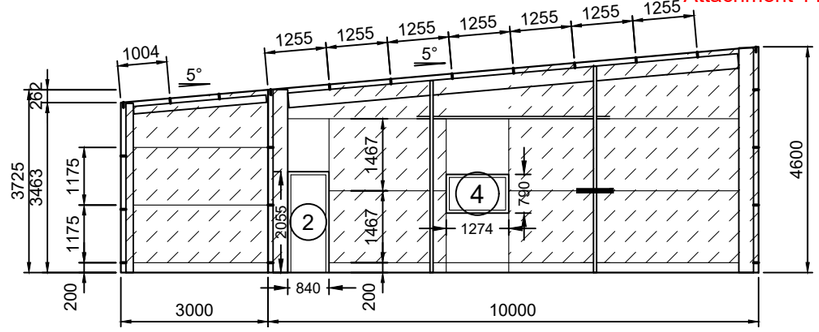

3/3 REAR FRAMING ELEVATION

SCALE: 1:125

FRAME #4

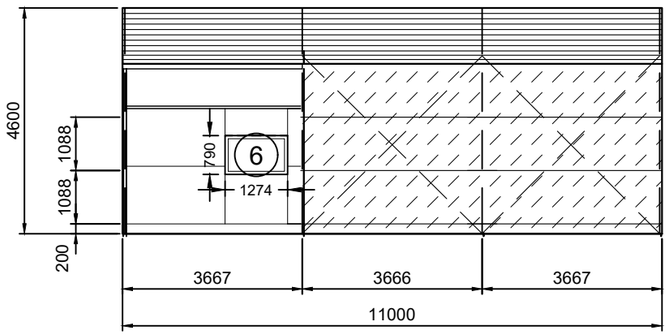

1/3 SIDEWALL A FRAMING ELEVATION

SCALE: 1:125

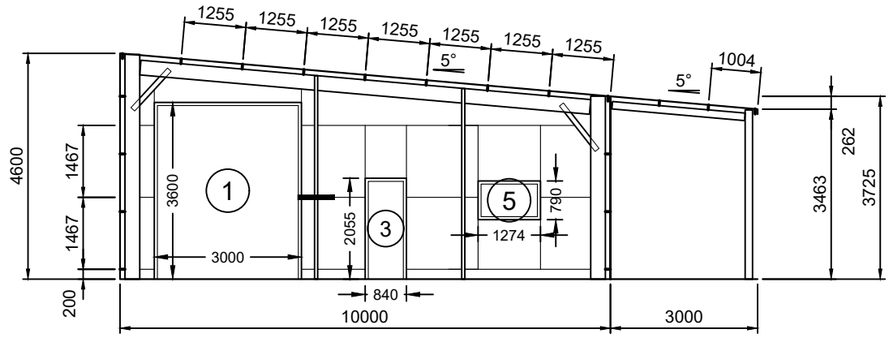

4/3 FRONT FRAMING ELEVATION

SCALE: 1:125

FRAME #1

REV	DATE	DESCRIPTION
A	28-11-2024	-

COLD FORMED BUILDINGS

ANOTHER COLD FORMED BUILDING DESIGNED BY ACT BUILDING SYSTEMS

VENN ENGINEERING

PO Box 3084
THIRROUL NSW 2515
sheds@venn.engineering
ABN 39 626 802 257

Signed ..... Date 28-11-2024

Grant J Wood MIEAust CPEng NER RPEQ
Registered EA Chartered Professional Engineer (No. 2383009)
Registered Professional Engineer QLD (No. 14384)
Registered Civil Engineer Building Practitioner VIC (No. PE0002499)
Registered Certifying Engineer (structural) NT (No. 306371ES)
Building Services Provider (Engineer Civil) TAS (No. 690930425)

Customer Name: [redacted]

Site Address: Great Southern Highway
Woodanilling,
WA, 6316

DATE 28-11-2024
JOB NO. HGOR98570130
SHEET 3 of 11

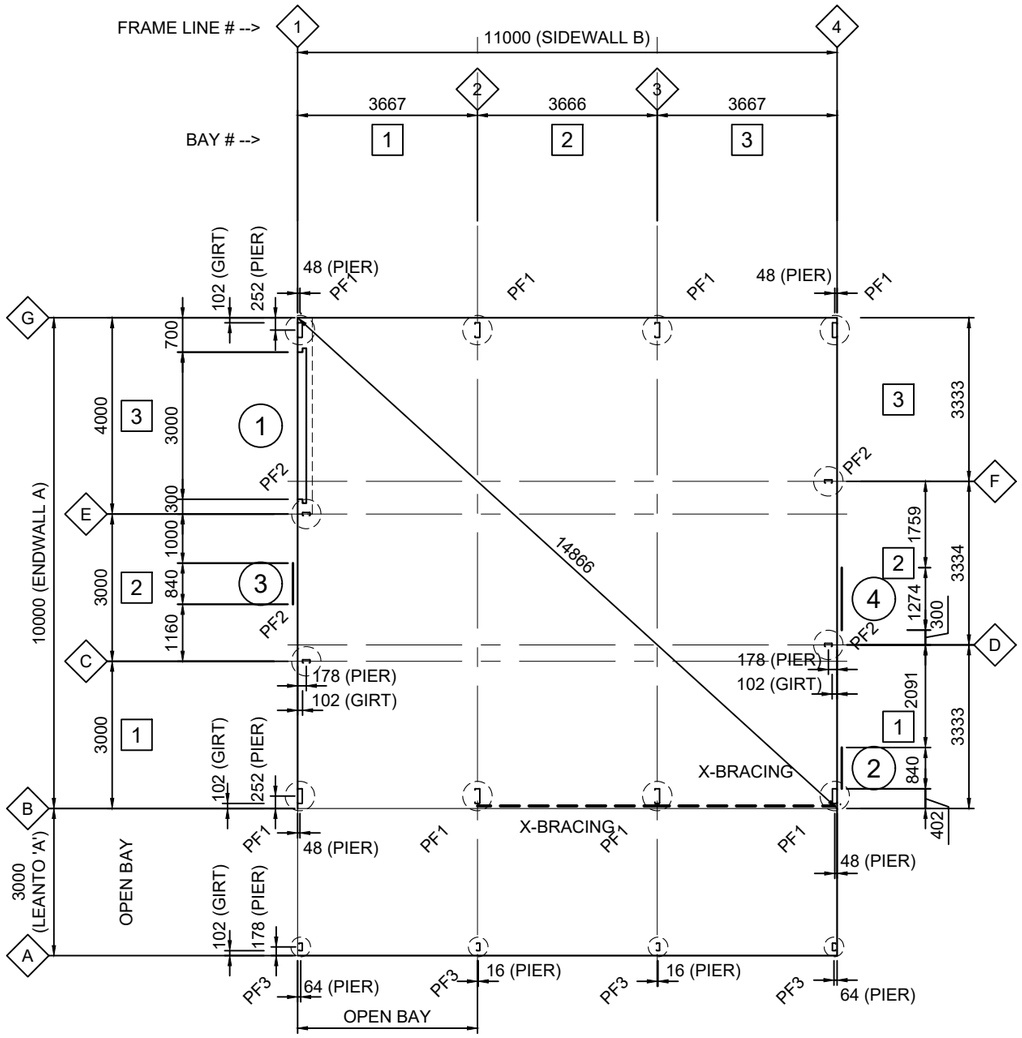

1/4 FOOTING/SLAB FLOOR PLAN

SCALE: 1:125

PF1 - 600Ø REINFORCED CONCRETE PIERS TO DETAIL
PF2 - 600Ø REINFORCED CONCRETE PIERS TO DETAIL
PF3 - 400Ø REINFORCED CONCRETE PIERS TO DETAIL

SLAB IS DESIGNED FOR CARS AND LIGHT VANS NOT EXCEEDING 3500kg GROSS MASS

CONCRETE CONTROL JOINTS SHALL BE PROVIDED IN SLAB TO DETAIL AT NOT MORE THAN 10m CENTRES IN EACH DIRECTION, APPROXIMATELY EQUALLY SPACED AND LOCATED APPROXIMATELY MIDWAY BETWEEN COLUMNS/MULLIONS

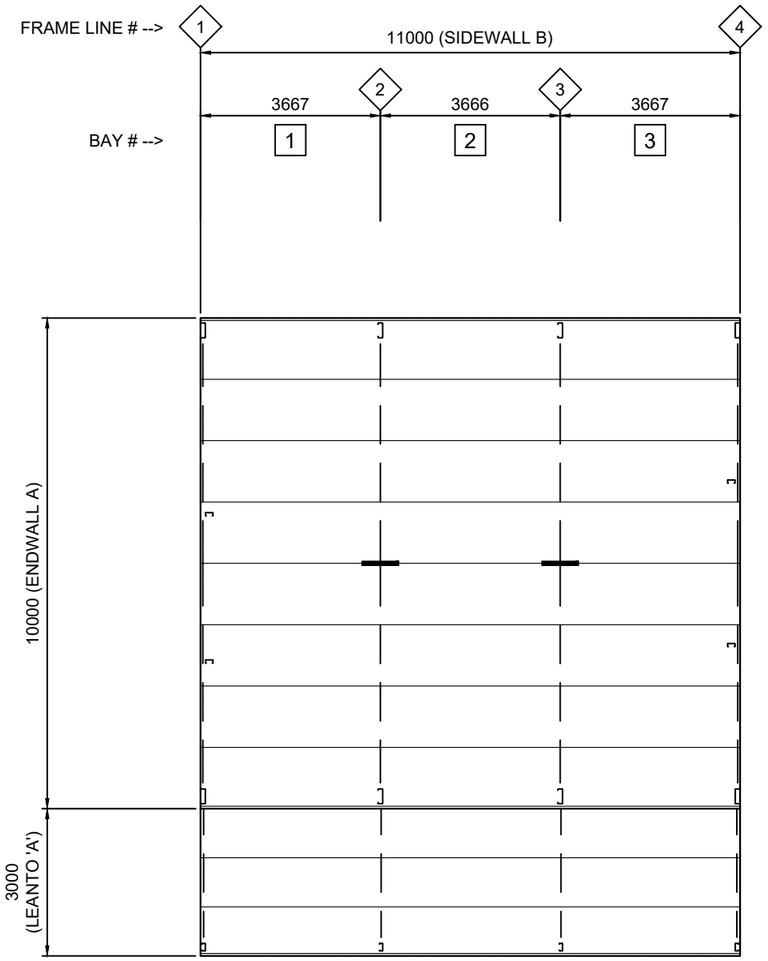

2/4 ROOF FRAMING PLAN

SCALE: 1:125 ALLOWABLE ADDITIONAL ROOF LOAD: 0.18 kPa (SOLAR PANELS)

ROOF SHEETING IS USED AS DIAPHRAGM TO BRACE THE BUILDING AND IS NOT TO BE CUT UNDER ANY CIRCUMSTANCES

REV	DATE	DESCRIPTION
A	28-11-2024	-

COLD FORMED BUILDINGS
ANOTHER COLD FORMED BUILDING DESIGNED BY ACT BUILDING SYSTEMS

VENN ENGINEERING
PO Box 3084
THIRROUL NSW 2515
sheds@venn.engineering
ABN 39 626 802 257
Signed ..... Date 28-11-2024
Grant J Wood MIEAust CPEng NER RPEQ
Registered EA Chartered Professional Engineer (No. 2383009)
Registered Professional Engineer QLD (No. 14384)
Registered Civil Engineer Building Practitioner VIC (No. PE0002499)
Registered Certifying Engineer (structural) NT (No. 306371ES)
Building Services Provider (Engineer Civil) TAS (No. 690930425)

Customer Name: [redacted]
Site Address: Great Southern Highway
Woodanilling,
WA, 6316

DATE 28-11-2024
JOB NO. HGOR98570130
SHEET 4 of 11

Attachment 11.1.1

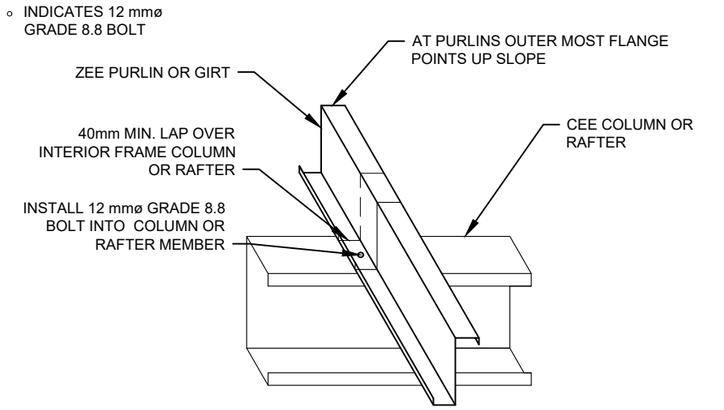

D — ZEE PURLIN/GIRT CONNECTION

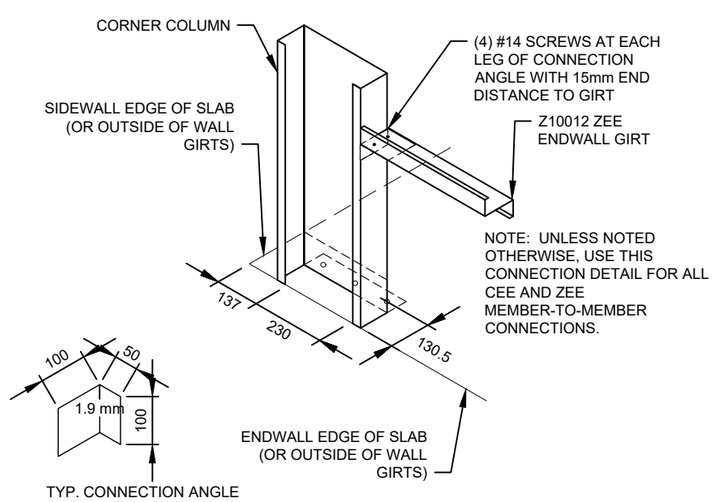

E — GIRTS IN-LINE CORNER COLUMN CONNECTIONS

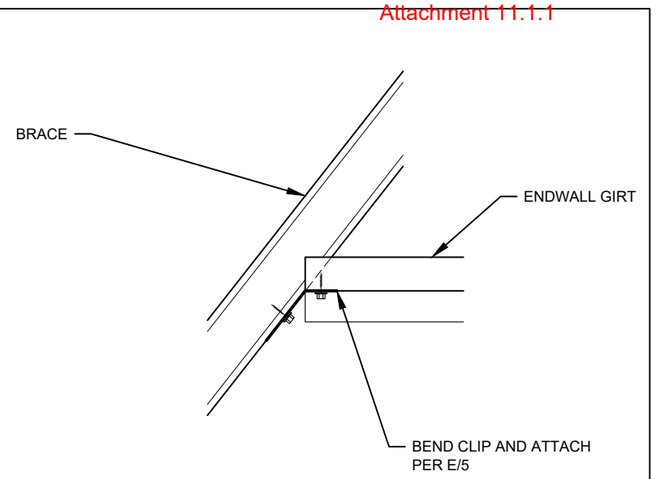

E2 — END GIRT TO BRACE

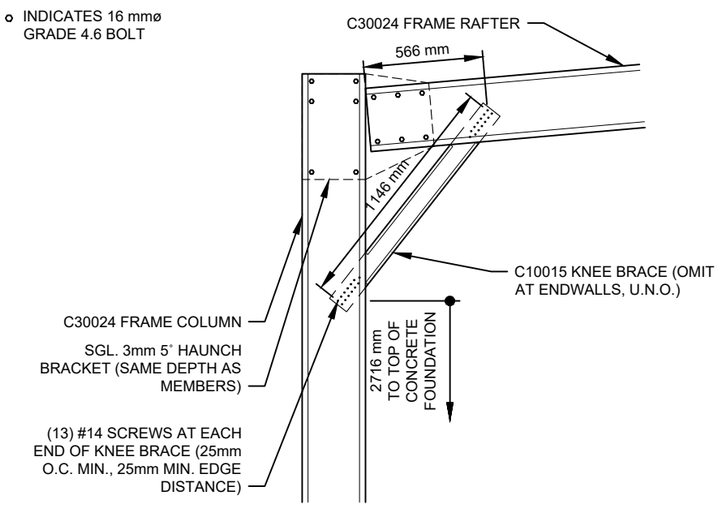

A — HAUNCH CONNECTION

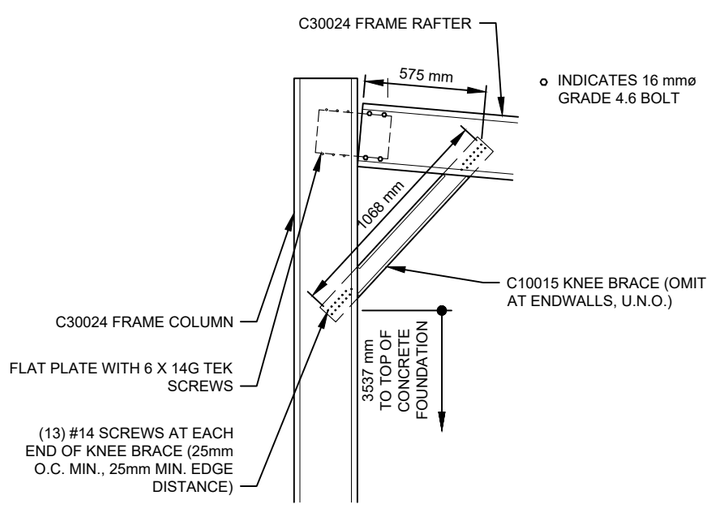

B — HIGH EAVE HAUNCH CONNECTION

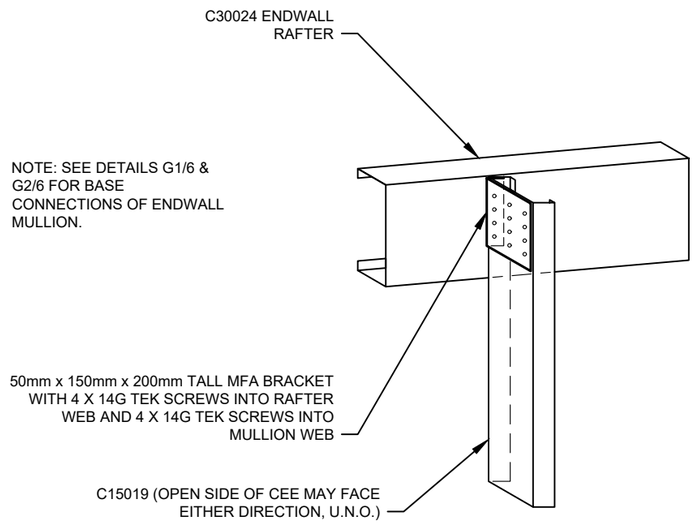

C — ENDWALL MULLION TO RAFTER

DETAIL DIMENSIONS ARE SHOWN IN MM UNLESS SPECIFIED OTHERWISE

REV	DATE	DESCRIPTION
A	28-11-2024	-

COLD FORMED BUILDINGS — ANOTHER COLD FORMED BUILDING DESIGNED BY ACT BUILDING SYSTEMS

VENN ENGINEERING
PO Box 3084
THIRROUL NSW 2515
sheds@venn.engineering
ABN 39 626 802 257
Signed ..... Date 28-11-2024
Grant J Wood MIEAust CPEng NER RPEQ
Registered EA Chartered Professional Engineer (No. 2383009)
Registered Professional Engineer QLD (No. 14384)
Registered Civil Engineer Building Practitioner VIC (No. PE0002499)
Registered Certifying Engineer (structural) NT (No. 306371ES)
Building Services Provider (Engineer Civil) TAS (No. 690930425)

Customer Name: [redacted]
Site Address: Great Southern Highway Woodanilling, WA, 6316

DATE 28-11-2024
JOB NO. HGOR98570130
SHEET 5 of 11

Attachment 11.1.1

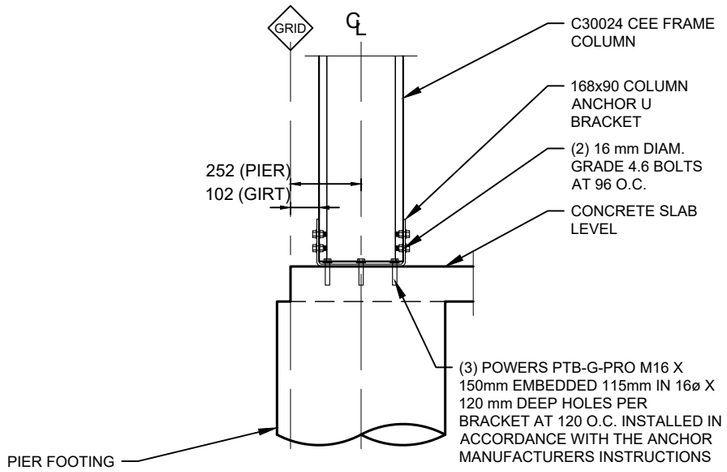

F4 FRAME COLUMN BASE DETAIL 2

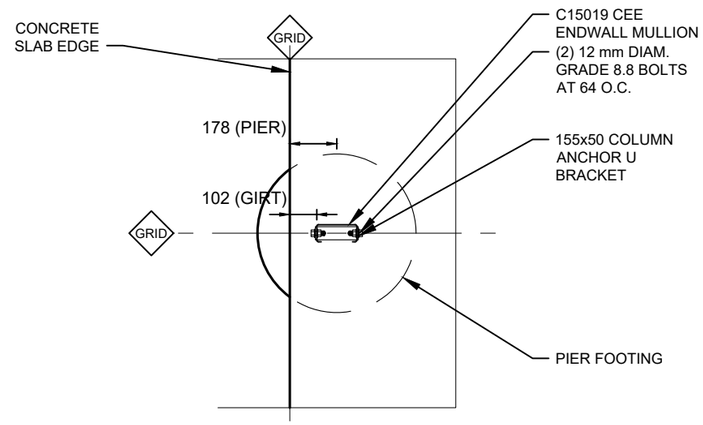

G1 ENDWALL MULLION BASE DETAIL

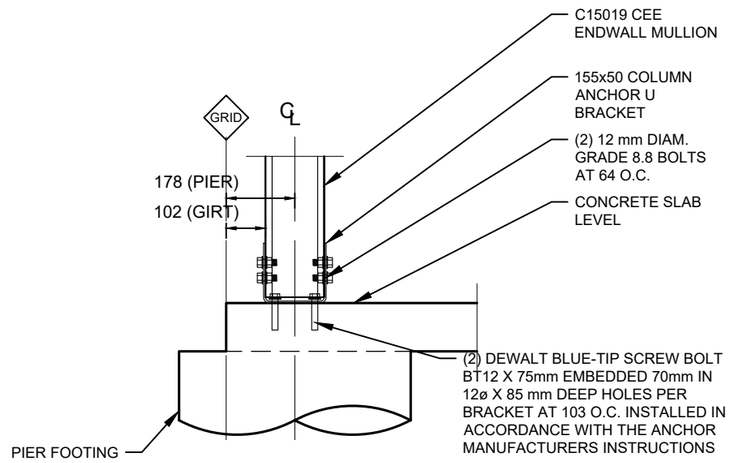

G2 ENDWALL MULLION BASE DETAIL 2

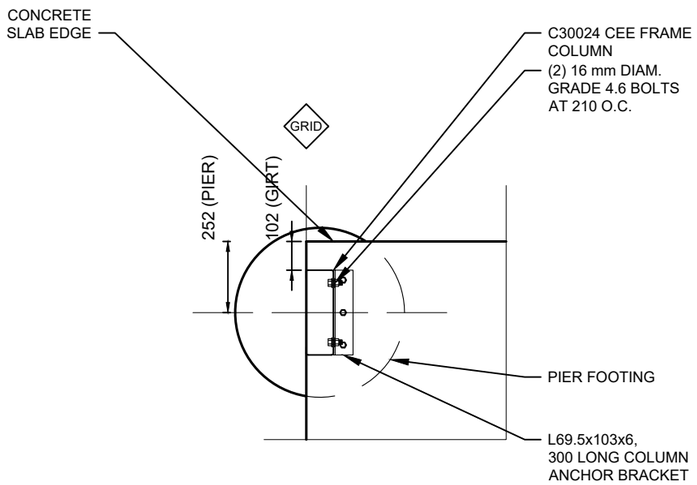

F1 CORNER COLUMN BASE DETAIL

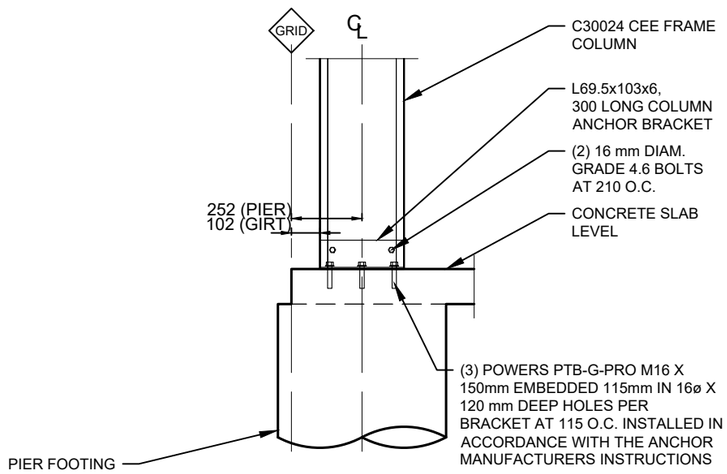

F2 CORNER COLUMN BASE DETAIL 2

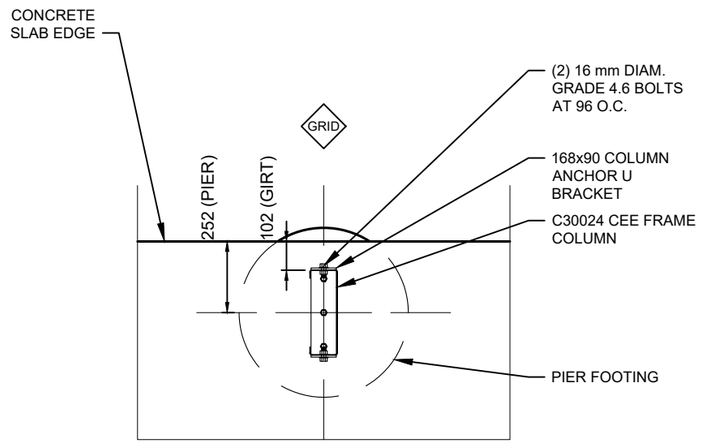

F3 FRAME COLUMN BASE DETAIL

DETAIL DIMENSIONS ARE SHOWN IN MM UNLESS SPECIFIED OTHERWISE

REV	DATE	DESCRIPTION
A	28-11-2024	-

COLD FORMED BUILDINGS
ANOTHER COLD FORMED BUILDING DESIGNED BY ACT BUILDING SYSTEMS

VENN ENGINEERING
PO Box 3084
THIRROUL NSW 2515
sheds@venn.engineering
ABN 39 626 802 257
Signed ..... Date 28-11-2024
Grant J Wood MIEAust CPEng NER RPEQ
Registered EA Chartered Professional Engineer (No. 2383009)
Registered Professional Engineer QLD (No. 14384)
Registered Civil Engineer Building Practitioner VIC (No. PE0002499)
Registered Certifying Engineer (structural) NT (No. 306371ES)
Building Services Provider (Engineer Civil) TAS (No. 690930425)

Customer Name: [redacted]
Site Address: Great Southern Highway
Woodanilling,
WA, 6316

DATE 28-11-2024
JOB NO. HGOR98570130
SHEET 6 of 11

Attachment 11.1.1

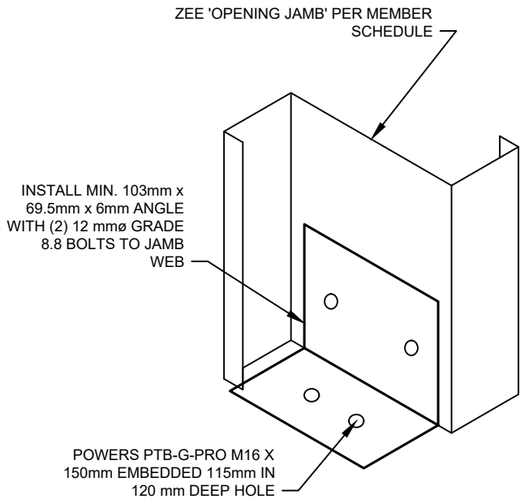

J2 ROLLER DOOR JAMB BASE CONNECTION

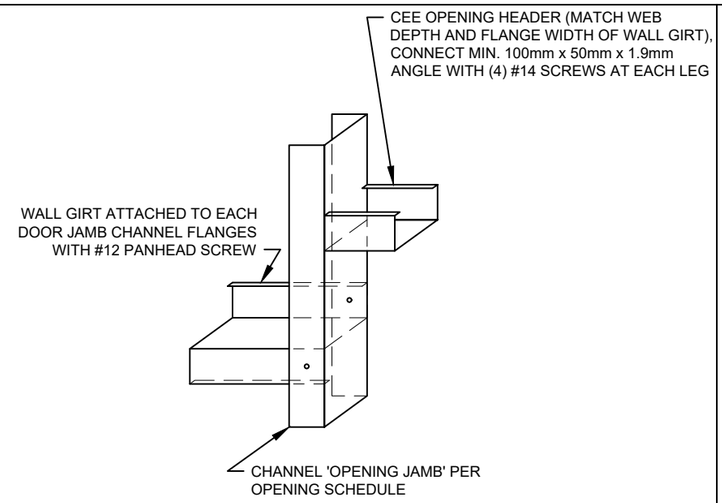

K1 OPENING CHANNEL JAMB GIRT CONNECTION

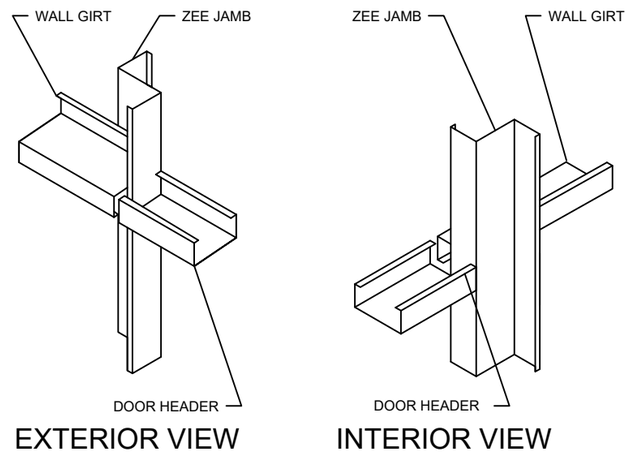

K2 OPENING ZEE JAMB GIRT CONNECTION

NOTE: ONLY STRUCTURAL INFORMATION IS INCLUDED IN THIS DETAIL. CONSULT PANEL MANUFACTURER FOR ADDT'L WEATHERTIGHTNESS RECOMMENDATIONS.

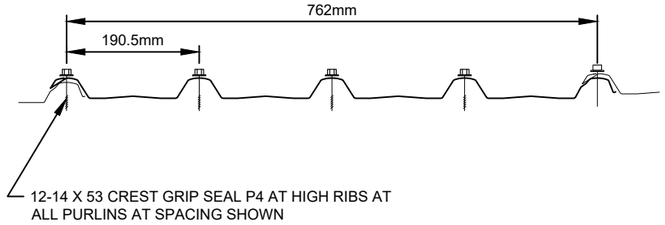

Metroll Inc
Trimclad 0.42

H ROOF SHEETING

NOTE: ONLY STRUCTURAL INFORMATION IS INCLUDED IN THIS DETAIL. CONSULT PANEL MANUFACTURER FOR ADDT'L WEATHERTIGHTNESS RECOMMENDATIONS.

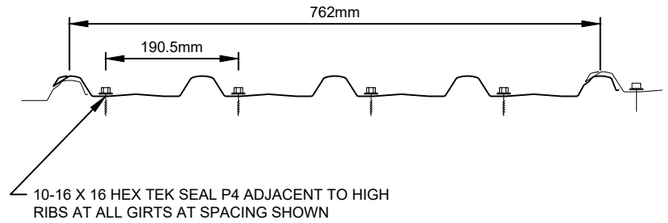

Metroll Inc
Trimclad 0.42

I WALL SHEETING

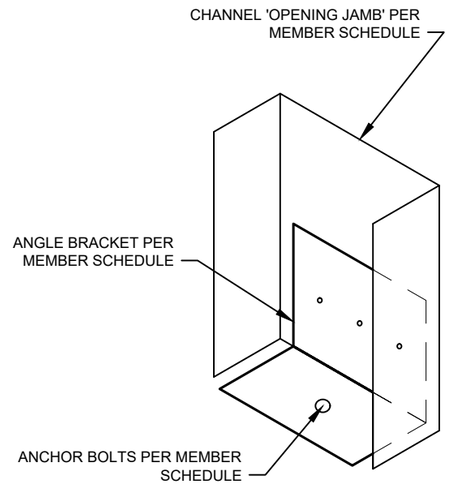

J1 PA DOOR JAMB BASE CONNECTION

DETAIL DIMENSIONS ARE SHOWN IN MM UNLESS SPECIFIED OTHERWISE

REV	DATE	DESCRIPTION
A	28-11-2024	-

COLD FORMED BUILDINGS
ANOTHER COLD FORMED BUILDING DESIGNED BY ACT BUILDING SYSTEMS

VENN ENGINEERING
PO Box 3084
THIRROUL NSW 2515
sheds@venn.engineering
ABN 39 626 802 257
Signed ..... Date 28-11-2024
Grant J Wood MIEAust CPEng NER RPEQ
Registered EA Chartered Professional Engineer (No. 2383009)
Registered Professional Engineer QLD (No. 14384)
Registered Civil Engineer Building Practitioner VIC (No. PE0002499)
Registered Certifying Engineer (structural) NT (No. 306371ES)
Building Services Provider (Engineer Civil) TAS (No. 690930425)

Customer Name: [redacted]
Site Address: Great Southern Highway
Woodanilling,
WA, 6316

DATE 28-11-2024
JOB NO. HGOR98570130
SHEET 7 of 11

Attachment 11.1.1

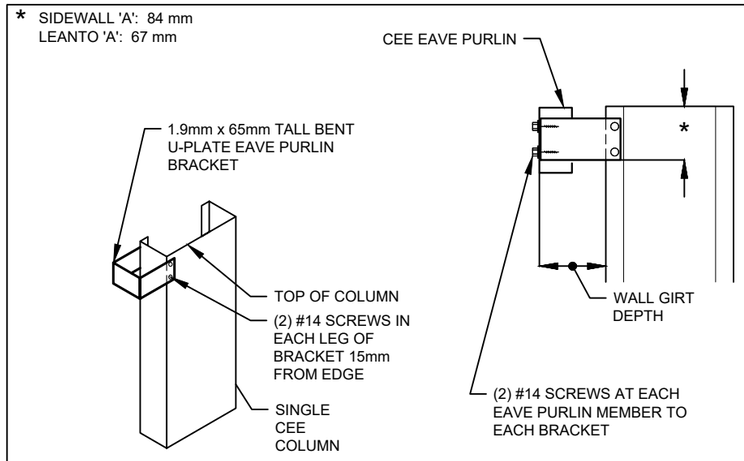

O EAVE PURLIN BRACKET

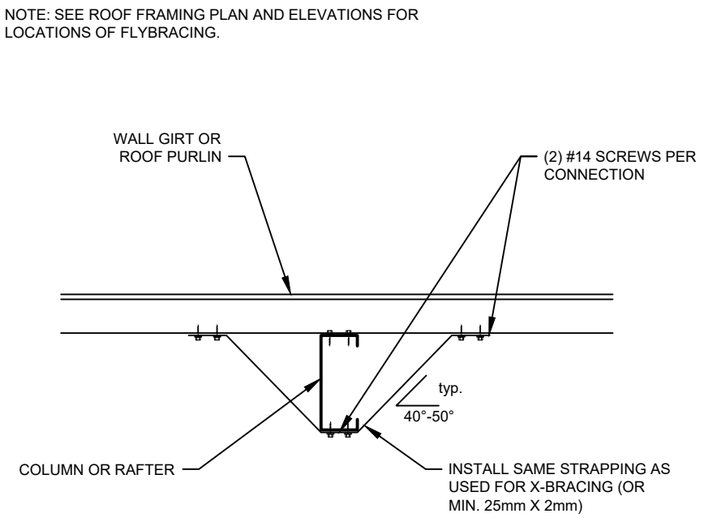

P FLYBRACING CONNECTION

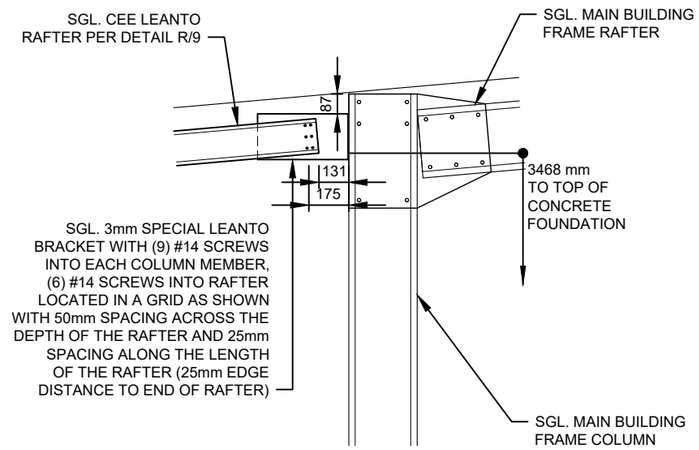

Q LEANTO RAFTER CONNECTION

LEANTO SWA

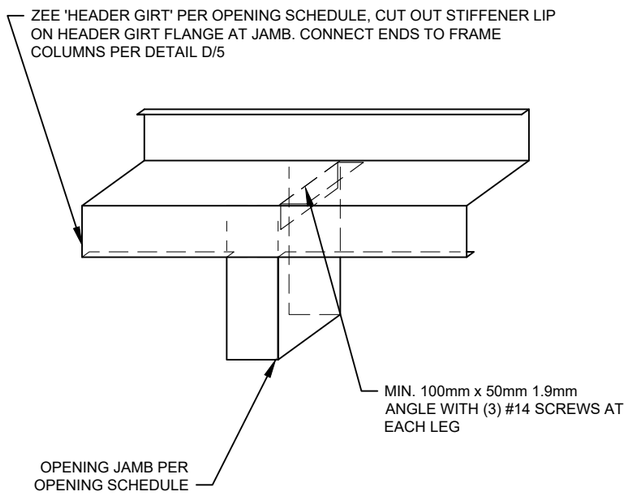

L1 CHANNEL JAMB TO HEADER GIRT CONNECTION

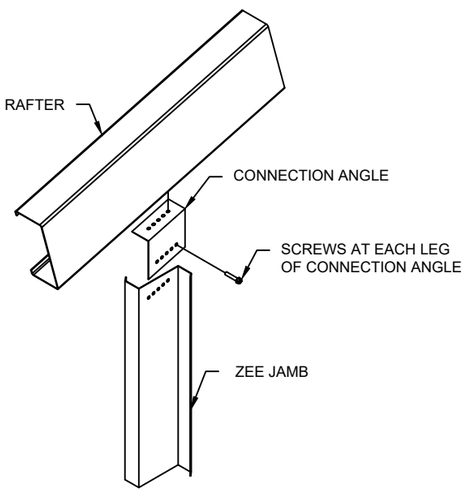

L2 ZEE JAMB TO RAFTER

ENDWALL: N/A

SIDEWALLS & ROOF: SGL. 32MM 1.2MM STRAP WITH (3) #14 SCREWS AT EACH END

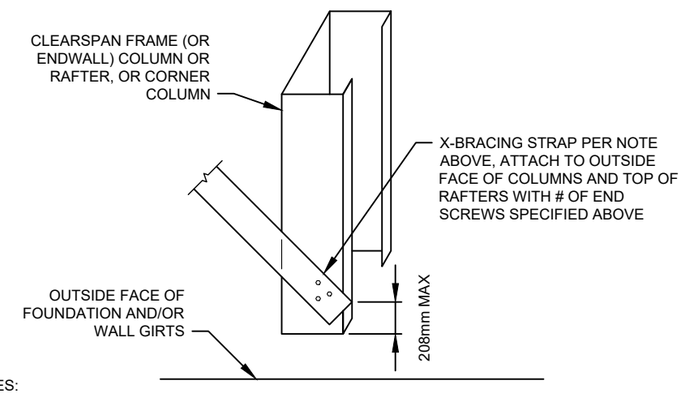

NOTES:
1) CONNECT STRAP AT TOP OF ADJACENT COLUMN OR RAFTER IN SAME MANNER.
2) IF DOUBLE STRAPS ARE SPECIFIED ABOVE, INSTALL SIDE-BY-SIDE, NOT ON TOP OF EACH OTHER.

M ROOF AND WALL X-BRACING CONNECTION

DETAIL DIMENSIONS ARE SHOWN IN MM UNLESS SPECIFIED OTHERWISE

REV	DATE	DESCRIPTION
A	28-11-2024	-

COLD FORMED BUILDINGS
ANOTHER COLD FORMED BUILDING DESIGNED BY ACT BUILDING SYSTEMS

VENN ENGINEERING
PO Box 3084
THIRROUL NSW 2515
sheds@venn.engineering
ABN 39 626 802 257
Signed ..... Date 28-11-2024
Grant J Wood MIEAust CPEng NER RPEQ
Registered EA Chartered Professional Engineer (No. 2383009)
Registered Professional Engineer QLD (No. 14384)
Registered Civil Engineer Building Practitioner VIC (No. PE0002499)
Registered Certifying Engineer (structural) NT (No. 306371ES)
Building Services Provider (Engineer Civil) TAS (No. 690930425)

Customer Name: [redacted]
Site Address: Great Southern Highway
Woodanilling,
WA, 6316

DATE 28-11-2024
JOB NO. HGOR98570130
SHEET 8 of 11

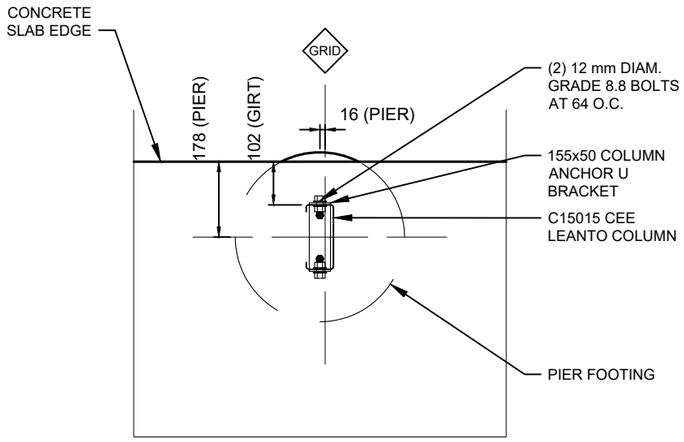

S13 LEANTO COLUMN BASE DETAIL

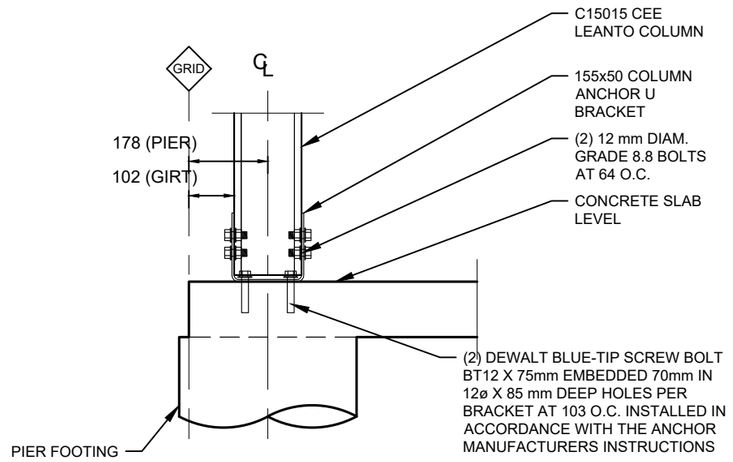

S14 LEANTO COLUMN BASE DETAIL 2

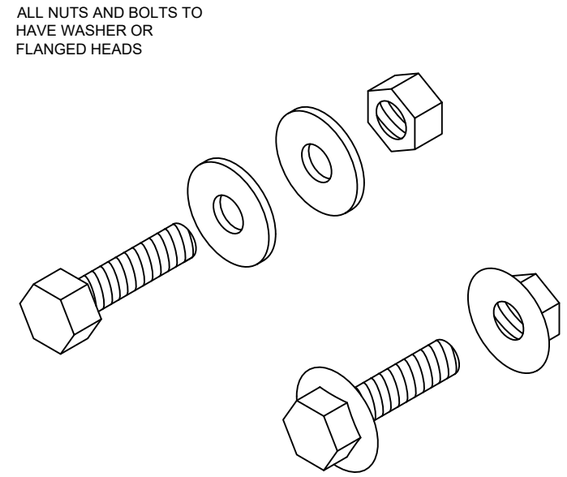

U BOLT OPTIONS

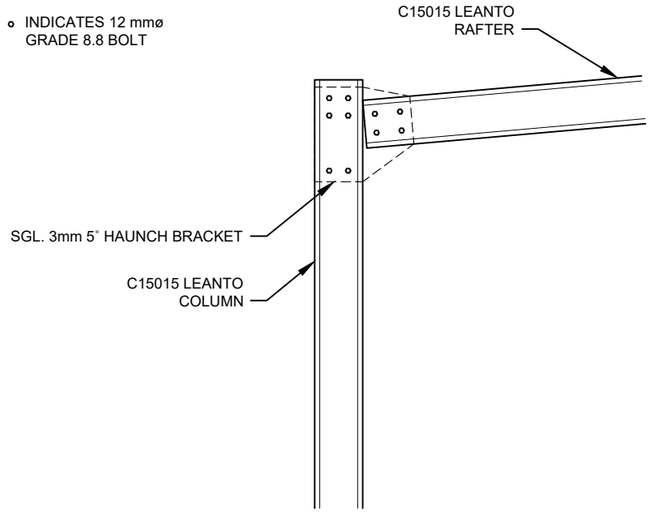

R LEANTO HAUNCH CONNECTION

LEANTO SWA

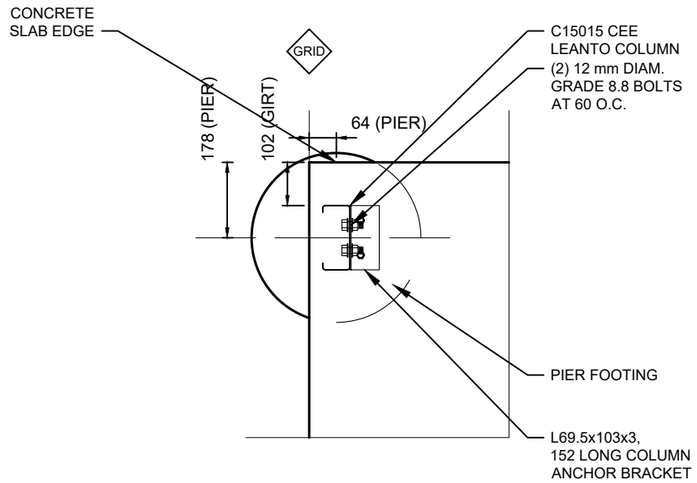

S11 LEANTO CORNER COLUMN BASE DETAIL

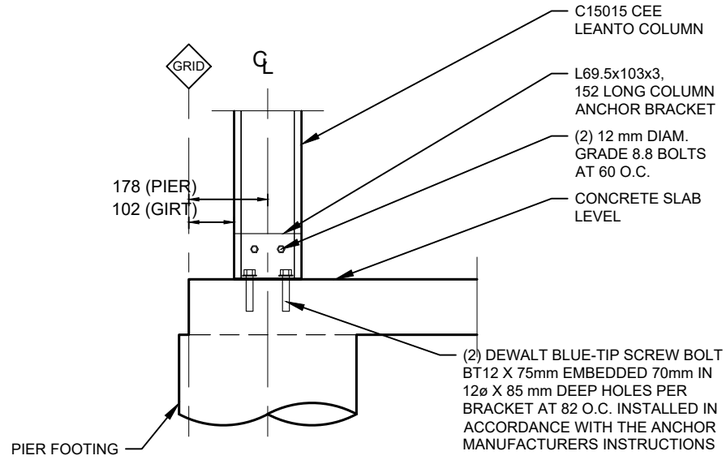

S12 LEANTO CORNER COLUMN BASE DETAIL 2

DETAIL DIMENSIONS ARE SHOWN IN MM UNLESS SPECIFIED OTHERWISE

REV	DATE	DESCRIPTION
A	28-11-2024	-

COLD FORMED BUILDINGS

ANOTHER COLD FORMED BUILDING DESIGNED BY ACT BUILDING SYSTEMS

VENN ENGINEERING
PO Box 3084
THIRROUL NSW 2515
sheds@venn.engineering
ABN 39 626 802 257
Signed ..... Date 28-11-2024
Grant J Wood MIEAust CPEng NER RPEQ
Registered EA Chartered Professional Engineer (No. 2383009)
Registered Professional Engineer QLD (No. 14384)
Registered Civil Engineer Building Practitioner VIC (No. PE0002499)
Registered Certifying Engineer (structural) NT (No. 306371ES)
Building Services Provider (Engineer Civil) TAS (No. 690930425)

Customer Name: [redacted]
Site Address: Great Southern Highway
Woodanilling,
WA, 6316

DATE 28-11-2024
JOB NO. HGOR98570130
SHEET 9 of 11

Attachment 11.1.1

	PF1	PF2	PF3
Dp	700mm	500mm	500mm
Diameter	600mm	600mm	400mm
Ds	125mm	125mm	125mm

MAX SLAB DIMENSION	SLAB MESH
<18m	SL72
18-25m	SL82
>25m	SL92

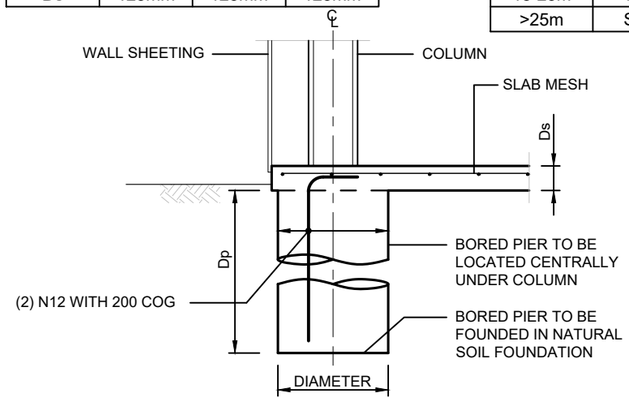

Y SLAB WITH PIER FOOTING DETAIL

MAX SLAB DIMENSION	SLAB MESH
<18m	SL72
18-25m	SL82
>25m	SL92

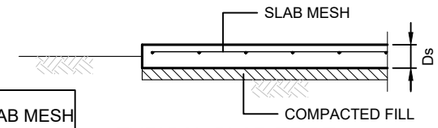

TYPICAL SLAB EDGE

Ds
125mm

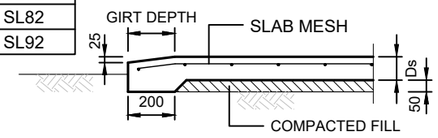

SLAB EDGE FOR ROLLER DOOR BAYS

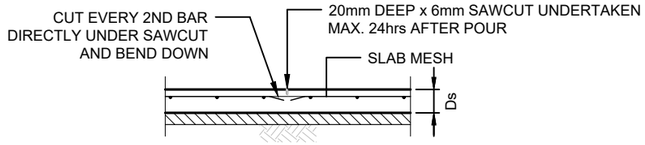

CONTROL JOINT

Z SLAB DETAIL

DETAIL DIMENSIONS ARE SHOWN IN MM UNLESS SPECIFIED OTHERWISE

REV	DATE	DESCRIPTION
A	28-11-2024	-

COLD FORMED BUILDINGS
ANOTHER COLD FORMED BUILDING DESIGNED BY ACT BUILDING SYSTEMS

VENN ENGINEERING
PO Box 3084
THIRROUL NSW 2515
sheds@venn.engineering
ABN 39 626 802 257
Signed ..... Date 28-11-2024
Grant J Wood MIEAust CPEng NER RPEQ
Registered EA Chartered Professional Engineer (No. 2383009)
Registered Professional Engineer QLD (No. 14384)
Registered Civil Engineer Building Practitioner VIC (No. PE0002499)
Registered Certifying Engineer (structural) NT (No. 306371ES)
Building Services Provider (Engineer Civil) TAS (No. 690930425)

Customer Name: [redacted]
Site Address: Great Southern Highway
Woodanilling,
WA, 6316

DATE 28-11-2024
JOB NO. HGOR98570130
SHEET 10 of 11

MEMBER SCHEDULE			
COMPONENT			TYPE
CLEAR SPAN PORTAL (FRAMES 2, 3)	MEMBER	RAFTER	Single C30024
		COLUMN	Single C30024
		APEX BRACE	-
		KNEE BRACE	Single C10015
	BASE CONNECTION	BRACKET TYPE	Base cleat bolt down bracket BC.300V2
		ANCHOR BOLTS	(3) Powers PTB-G-PRO M16 x 150mm embedded 115mm
ENDWALL PORTAL (FRAME 1)	MEMBER	RAFTER	Single C30024
		COLUMN	Single C30024
		APEX BRACE	-
		KNEE BRACE	Single C10015
	BASE CONNECTION	BRACKET TYPE	Angle base connection ABC.C300.210V2
		ANCHOR BOLTS	(3) Powers PTB-G-PRO M16 x 150mm embedded 115mm
ENDWALL B PORTAL (FRAME 4)	MEMBER	RAFTER	Single C30024
		COLUMN	Single C30024
		APEX BRACE	-
		KNEE BRACE	-
	BASE CONNECTION	BRACKET TYPE	Angle base connection ABC.C300.210V2
		ANCHOR BOLTS	(3) Powers PTB-G-PRO M16 x 150mm embedded 115mm
ENDWALL MULLION	MEMBER	COLUMN	Single C15019
	BASE CONNECTION	BRACKET TYPE	Base cleat bolt down bracket BC.150
		ANCHOR BOLTS	(2) Dewalt Blue-tip screw bolt BT12 x 75mm embedded 70mm
ROOF PURLINS		MEMBER	Single Z10019 @ 1255mm centres
EAVE PURLIN		MEMBER	Single C10019
SIDEWALL GIRTS		MEMBER	Single Z10012 @ 1175mm centres
ENDWALL GIRTS		MEMBER	Single Z10012 @ 1467mm centres
LEANTO A INTERIOR FRAME (FRAMES 2, 3)	MEMBER	RAFTER	Single C15015
		COLUMN	Single C15015
		APEX BRACE	-
		KNEE BRACE	-
	BASE CONNECTION	BRACKET TYPE	Base cleat bolt down bracket BC.150
		ANCHOR BOLTS	(2) Dewalt Blue-tip screw bolt BT12 x 75mm embedded 70mm
LEANTO A ENDWALL FRAME (FRAMES 1, 4)	MEMBER	RAFTER	Single C15015
		COLUMN	Single C15015
		APEX BRACE	-
		KNEE BRACE	-
	BASE CONNECTION	BRACKET TYPE	Angle base connection ABC.C150.60
		ANCHOR BOLTS	(2) Dewalt Blue-tip screw bolt BT12 x 75mm embedded 70mm
LEANTO A ROOF PURLINS		MEMBER	Single Z10019 @ 1004mm centres
LEANTO A EAVE PURLIN		MEMBER	Single C10019
LEANTO A SIDEWALL GIRTS		MEMBER	Single Z10012 @ 1088mm centres
LEANTO A ENDWALL GIRTS		MEMBER	Single Z10012 @ 1175mm centres
OPENING (1)	MEMBER	JAMB	Single Z25024
		HEADER/SILL	Single C10012
	BASE CONNECTION	BRACKET TYPE	Angle base connection ABC.C250.160V2
		ANCHOR BOLTS	(2) Powers PTB-G-PRO M16 x 150mm embedded 115mm
OPENING (2)	MEMBER	JAMB	Single Unlipped 102 x 1.9 Cee
		HEADER/SILL	Single C10012
	BASE CONNECTION	BRACKET TYPE	Angle base connection ABC.SINGLE
		ANCHOR BOLTS	(1) Powers PB-PRO M12 x 86mm embedded 76mm
OPENINGS (3-4)	MEMBER	JAMB	Single Unlipped 102 x 1.5 Cee
		HEADER/SILL	Single C10012
	BASE CONNECTION	BRACKET TYPE	Angle base connection ABC.SINGLE
		ANCHOR BOLTS	(1) Powers PB-PRO M12 x 86mm embedded 76mm
OPENINGS (5-6)	MEMBER	JAMB	Single Unlipped 102 x 1.5 Cee
		HEADER/SILL	Single C10012
X-BRACING	STRAP		32mm x 1.2 strap

REV	DATE	DESCRIPTION
A	28-11-2024	-

COLD FORMED BUILDINGS

ANOTHER COLD FORMED BUILDING DESIGNED BY ACT BUILDING SYSTEMS

VENN ENGINEERING

PO Box 3084
THIRROUL NSW 2515
sheds@venn.engineering
ABN 39 626 802 257

Signed ..... Date 28-11-2024
Grant J Wood MIEAust CPEng NER RPEQ
Registered EA Chartered Professional Engineer (No. 2383009)
Registered Professional Engineer QLD (No. 14384)
Registered Civil Engineer Building Practitioner VIC (No. PE0002499)
Registered Certifying Engineer (structural) NT (No. 306371ES)
Building Services Provider (Engineer Civil) TAS (No. 690930425)

Customer Name: [redacted]
Site Address: Great Southern Highway
Woodanilling,
WA, 6316

DATE 28-11-2024
JOB NO. HGOR98570130
SHEET 11 of 11

Generic Temporary Bracing Information

The installation of temporary bracing is critical to avoid building collapse or damaging structural movement during construction. This collapse can occur with no notice and as such the installation of appropriate temporary bracing is critical to avoid damage, injury, and possible death. Determination, procurement, and correct installation of temporary bracing is the responsibility of the builder / primary contractor / installer.

Bracing Materials

The constructor / installer is to supply suitably sized materials for temporary bracing. These materials are generally capable of tension, but in some circumstances will need to be capable of tension and compression. Load rated ratchet strapping of an appropriate size can be used to temporarily 'x-brace' bays in both directions, until the final bracing systems are fullyinstalled. This is especially critical for buildings where X Bracing is not required in the final structure due to the use of moment frames or diaphragm bracing.

Temporary Bracing Location

The location of Temporary bracing will depend on the installation method used. Installation should be completed in accordance with the Construction Package, Engineering Plans, and Instruction Manuals. If the Frame First Method (most common) is used, then the use of tension only bracing and creating temporarily braced bays as per Fig 1 and Fig 2. can be used. As a basic guide, a minimum of every 4th bay should have temporary bracing installed as per Fig 2.

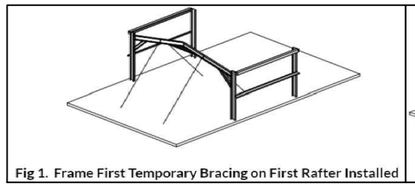

Fig 1. Frame First Temporary Bracing on First Rafter Installed

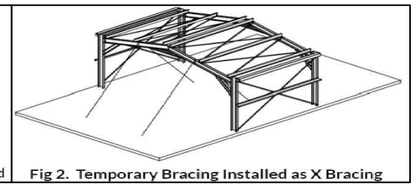

Fig 2. Temporary Bracing Installed as X Bracing

If the Tilt Up Method Is used (where walls are constructed on the ground And then tilted into place), then the tops of columns are braced with a tension and compression brace in the same direction Fig 3. Then rafters and purlins can be installed with temporary bracing holding rafters in place (similar to Fig 1) until final bracing of diaphragm sheeting is installed.

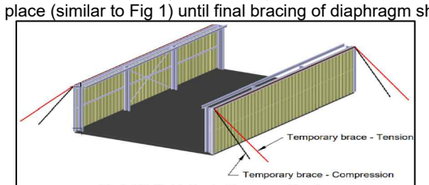

Fig 3. Tilt Up Method – Temporary Bracing

Typically, braces should be positioned diagonally across the structure from the top to the bottom, intersecting near the midpoint to provide stability, optimally at a 45-degree angle but no less than a 20-degree angle. The connection strength of temporary bracing is a critical consideration and these connections must be capable of resisting the potentially substantial temporary bracing loads – whether this connection point be to the building, the foundations or to the ground. Dependent upon building size this may include heavy angles and post installed concrete anchors. The temporary bracing methods used must be capable of fully stabilising the structure during the construction process.

Additional Temporary Bracing

The temporary bracing described is a minimum requirement for a standard-sized building in average conditions. Additional consideration should be given to larger building spans and/or challenging site conditions. There may also be an increased risk in relation to partially completed buildings and exposed sites. It is recommended that extra temporary bracing is utilized if moderate wind speeds are expected on site. Additional support elements, such as steel cables may need to be introduced that can be attached to the building's framework and anchored to the ground or other stable structures to provide extra stability. The frame should remain rigid throughout and such responsibility lies with the constructor. Buildings should not be left in a partially completed state longer than necessary.

Bracing Removal

The temporary bracing should not be removed until all purlins, girts and permanent cross bracing, diaphragm bracing or moment frames where used are installed. The temporary bracing is to remain in place where possible, until the roof and wall cladding is fully installed. If you need any further information regarding the installation of temporary bracing or are at all unsure of the necessary requirements for this specific building, there are guides available through various industry bodies:

https://www.safeworkaustralia.gov.au/ 'Construction work – steel erection. Information sheet', 2016.
https://www.steel.org.au/ 'Structural steelwork fabrication and erection code of practice', 2014.
https://www.standards.org.au/ AS/NZS 5131:2016 'Structural steelwork – Fabrication and erection.

Support is also available at support@actbuildingsystems.com.

THE ABOVE INFORMATION REGARDING TEMPORARY BRACING DOES NOT FORM PART OF THE ENGINEERING CERTIFICATION FOR THIS DESIGN AND IS PROVIDED AS A GUIDE TO AID INSTALLATION ONLY.

Attachment 11.1.1

CONSTRUCTION PACKAGE FOR COLD FORMED STEEL BUILDING
CREATED FOR [redacted]
JOB NUMBER 98570130

TABLE OF CONTENTS

Building Layout Plan 2
Anchor Bolt Details 3
Portal Frame Sections 5
Roof Framing Plan 8
Girt Layout 9
Sheeting Layout 13

CONSTRUCTION PACKAGE NOTES

This construction package is to be used in conjunction with the created order for the job. All lengths and piece marks of materials in this package will correspond to an item in the order. For example, on the Sidewall A girt layout, there will likely be an item with a piece mark of SGA1. This will correspond to a line item in the order with the piece mark of SGA1. Products that do not include a piece mark will be marked with the product code.

All girt layout and sheeting layouts drawings in this construction package are exterior views, and in these illustrations, components are drawn as if viewed from the outside of the building.

All drawings in this construction package are for reference only, and are to be used to supplement the engineering drawings. If any discrepancies occur, the engineering plans will always take precedence.

CONSTRUCTION NOTIFICATIONS

The following items will require non-typical installation that will take extra time and care during the construction process. Please take precautions.

Column at high eave of single slope building has been lengthened to accommodate eave purlin bracket installation requirements. Ordered column would interfere with roof sheeting, and will need to be coped on site so that roof sheeting will install correctly.

Leanto special bracket is installed with screws to main column and screws must drill through multiple layers of steel. Ensure that screws with adequate drill tips are used at this connection for proper installation.

Some Items In order will need to be cut to length on site. Please see 'Notes' column In order for full list of Items to be cut and their lengths.

IMPORTANT

IN ADDITION TO THIS DOCUMENT, YOU SHOULD ALSO HAVE THE FOLLOWING BUILDING SPECIFIC DOCUMENTS FROM YOUR BUILDING REPRESENTATIVE:

- ENGINEERING PLAN
- COPY OF THE ORDER

FOR MORE INFORMATION TO HELP MAKE COLD FORMED CONSTRUCTION EASIER, PLEASE SEE THE BELOW LINKS:

INSTALLATION MANUALS
http://bit.ly/ACTInstallManuals

CONSTRUCTION VIDEOS
http://bit.ly/ACTConstructionVids

HINTS AND TIPS
http://bit.ly/ACTConstructionTips

PRELIMINARY ONLY
NOT FOR CONSTRUCTION

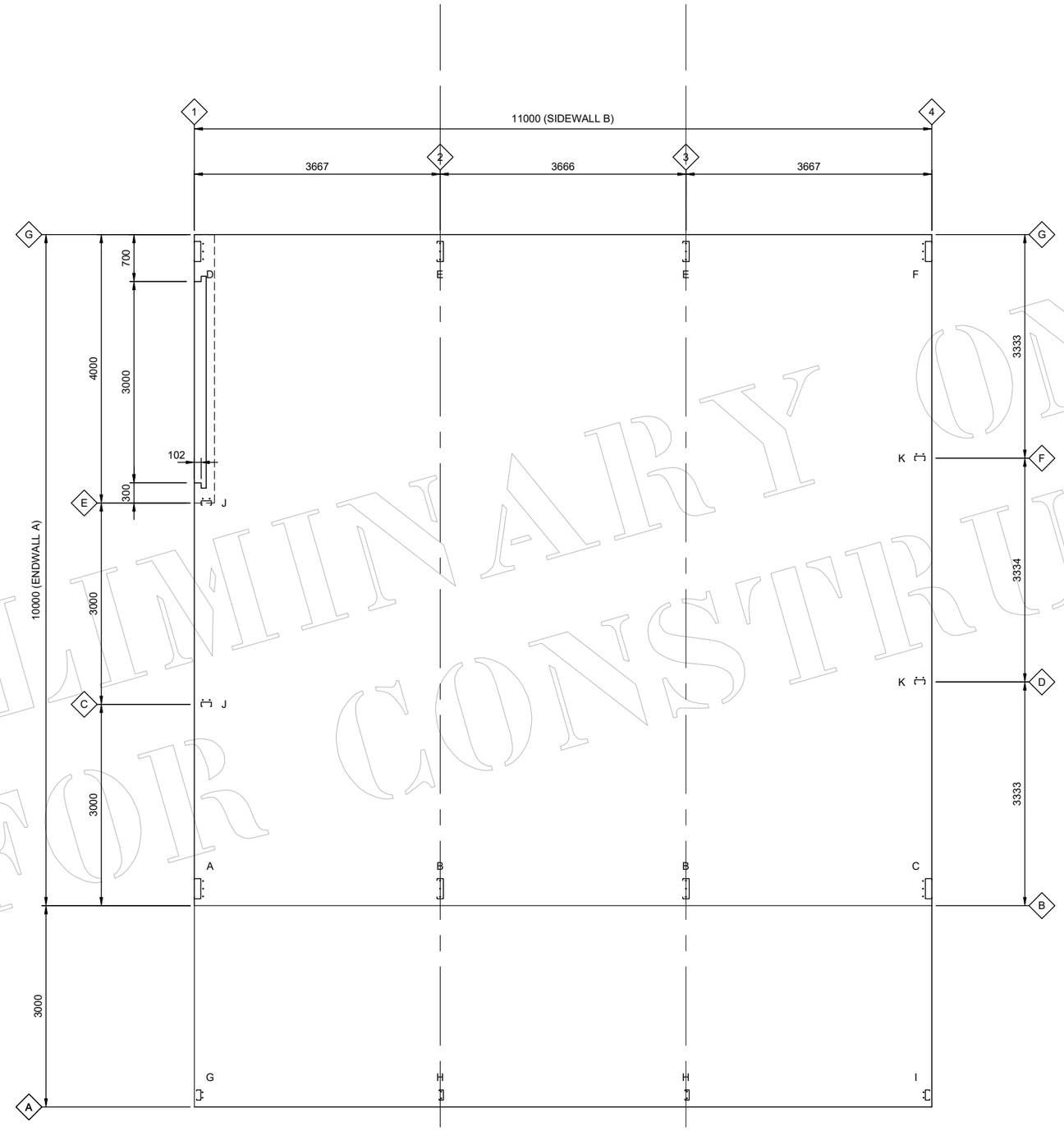

PRELIMINARY ONLY
NOT FOR CONSTRUCTION

ANCHOR BOLTS		
QTY	LOCATION	DIA
24	ANCHOR BOLTS - SIDEWALL COLUMNS	16 mm
8	ANCHOR BOLTS - LEANTO A SIDEWALL COLUMNS	12 mm
8	ANCHOR BOLTS - ENDWALL COLUMNS	12 mm
4	ANCHOR BOLTS - ROLLER DOORS LARGE	16 mm
3	ANCHOR BOLTS - PA DOORS	12 mm
2	ANCHOR BOLTS - WINDOWS	12 mm

This illustration is for reference only, and is to be used to supplement the engineering drawings. If any discrepancies occur, the engineering plans will always take precedence.

Building Layout Plan

JOBNO HGOR98570130
SHEET 2 of 16

DATE 11-12-2024
SCALE 1:75

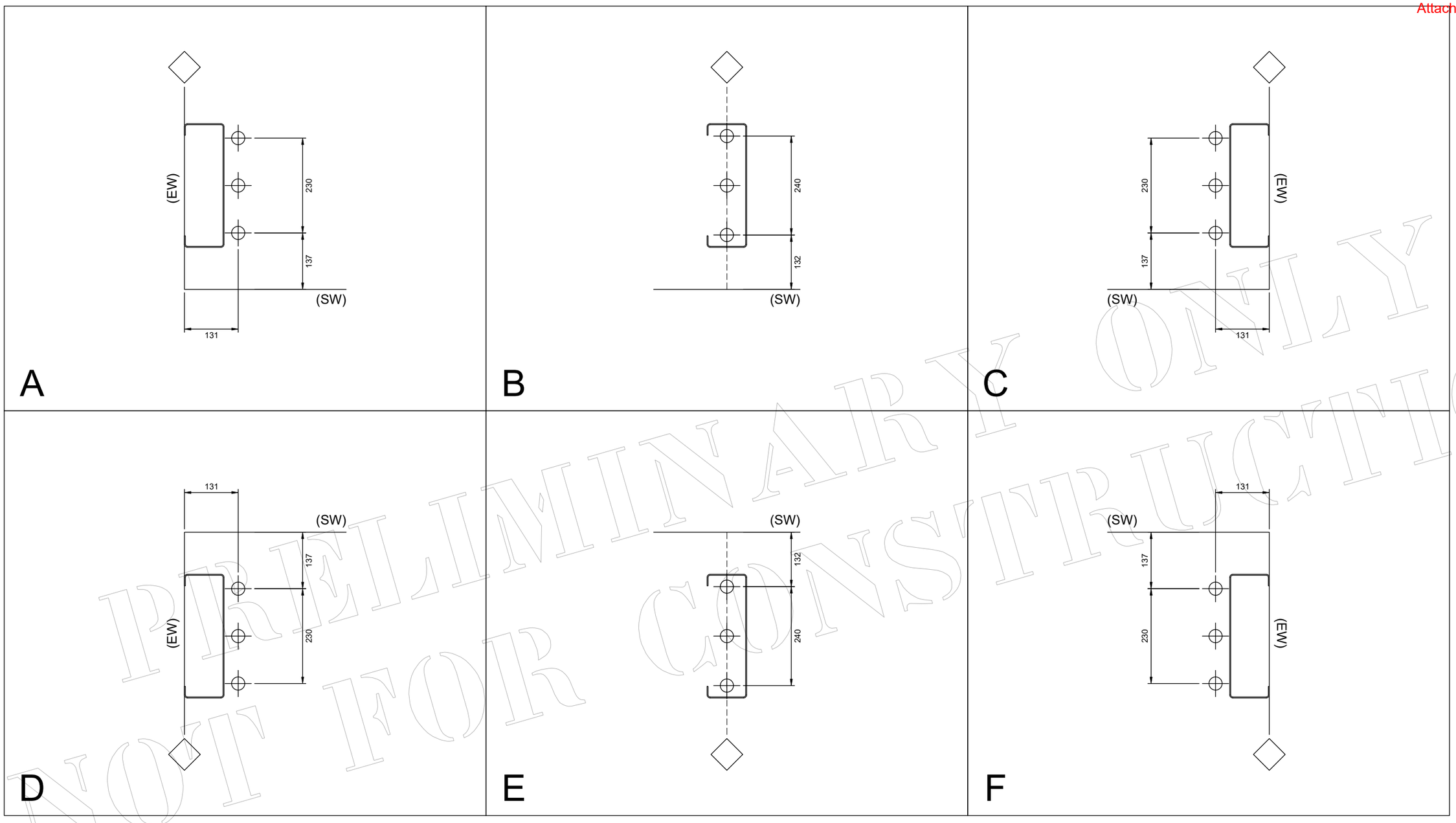

PRELIMINARY ONLY
NOT FOR CONSTRUCTION

This illustration is for reference only, and is to be used to supplement the engineering drawings. If any discrepancies occur, the engineering plans will always take precedence.

Anchor Bolt Details	HiTen	JOBNO	HGOR98570130	DATE	11-12-2024
		SHEET	3 of 16	SCALE	N/A

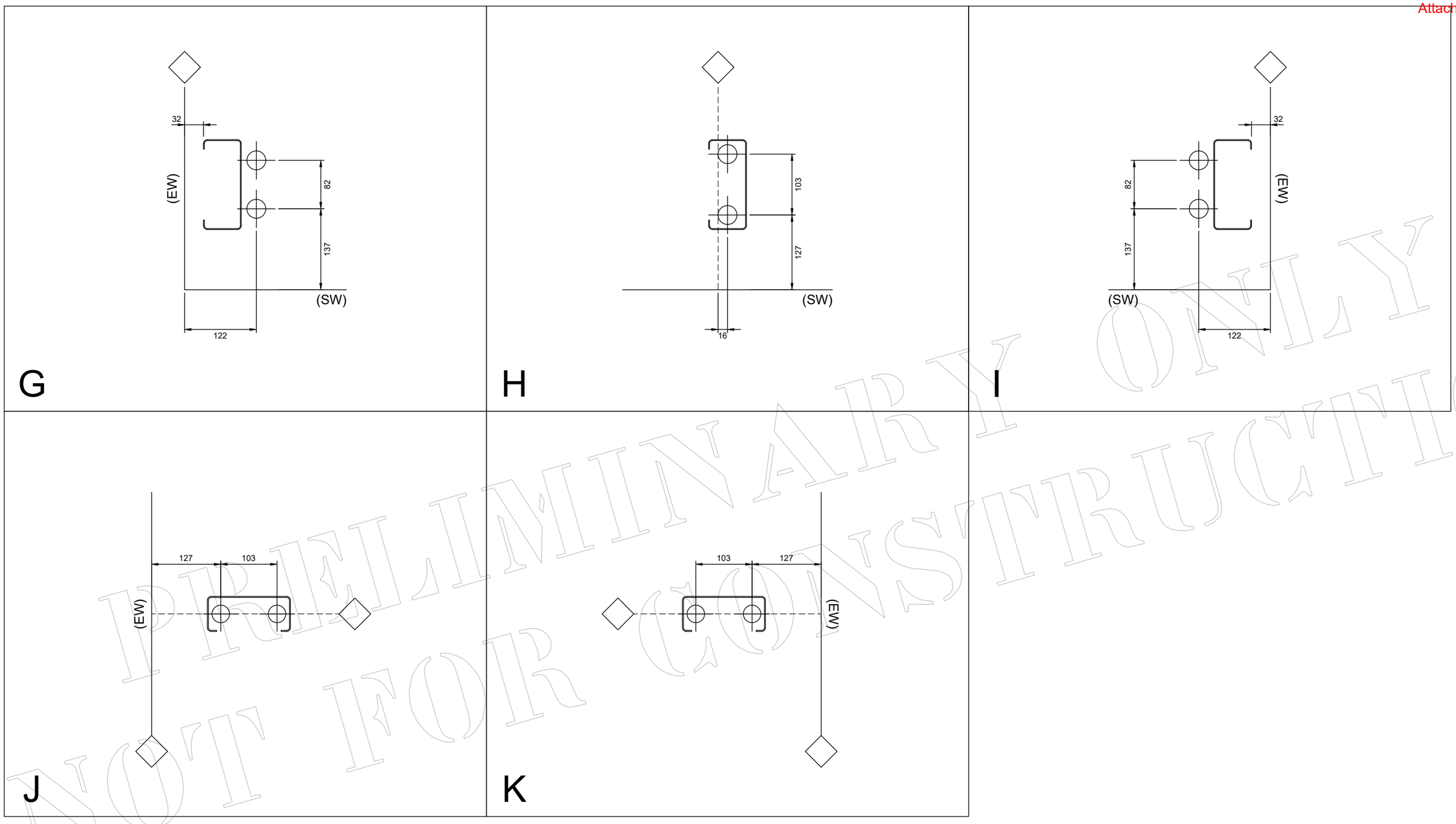

PRELIMINARY ONLY
NOT FOR CONSTRUCTION

This illustration is for reference only, and is to be used to supplement the engineering drawings. If any discrepancies occur, the engineering plans will always take precedence.

Anchor Bolt Details	JOBNO HGOR98570130 SHEET 4 of 16	DATE 11-12-2024 SCALE N/A		

Attachment 11.11

MEMBER TABLE		
Mark	Product	Length
CLA_1	C30024	3727 mm
CLB_1	C30024	4579 mm
EMULA1	C15019	3867 mm
EMULA2	C15019	4130 mm
HKNBRC	C10015	1148 mm
KNBRC	C10015	1226 mm
LA_CL_1	C15015	3448 mm
LA_RFT	C15015	2714 mm
RFTR	C30024	9205 mm

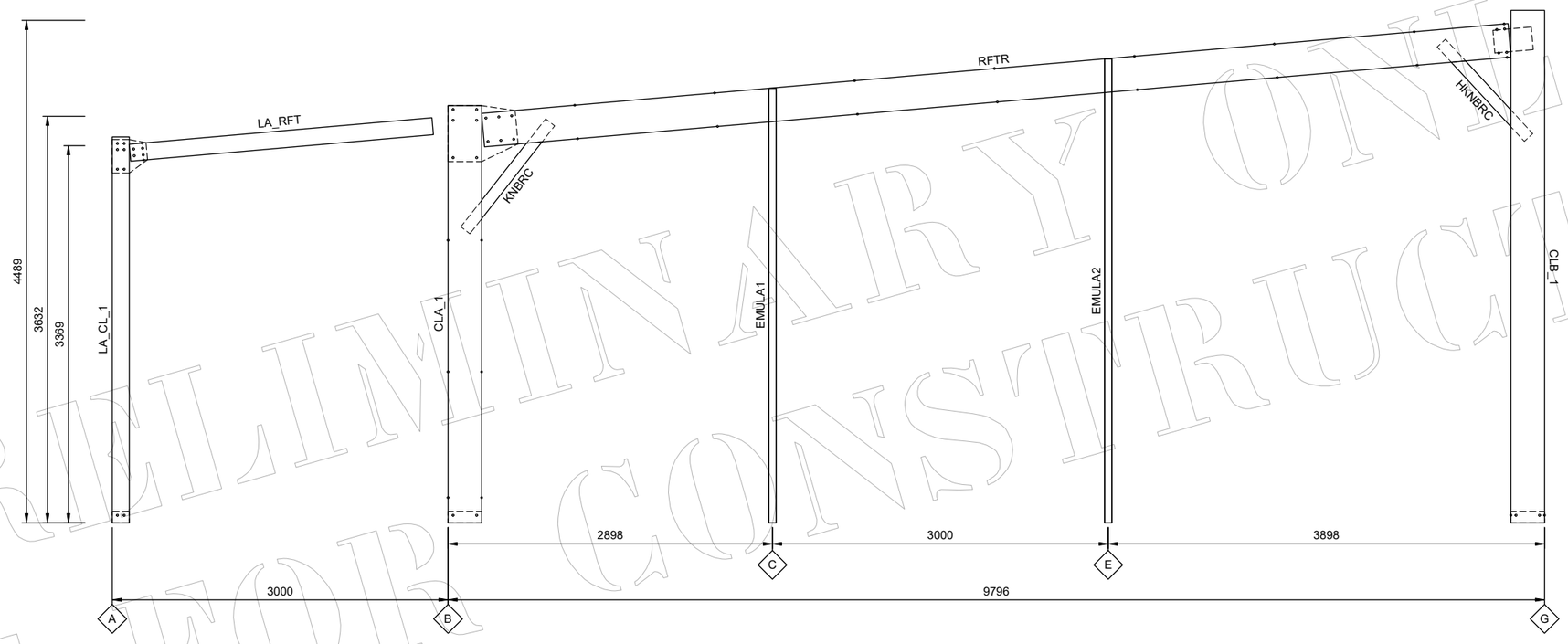

1/5 Portal Section

SCALE: 1:50

Frame Line 1

PRELIMINARY ONLY
NOT FOR CONSTRUCTION

This illustration is for reference only, and is to be used to supplement the engineering drawings. If any discrepancies occur, the engineering plans will always take precedence.

Portal Frame Sections	JOBNO HGOR98570130 SHEET 5 of 16	DATE 11-12-2024 SCALE 1:50

Attachment 11.11

MEMBER TABLE		
Mark	Product	Length
CLA_2	C30024	3709 mm
CLB_2	C30024	4561 mm
HKNBRC	C10015	1148 mm
KNBRC	C10015	1226 mm
LA_CL_2	C15015	3433 mm
LA_RFT	C15015	2714 mm
RFTR	C30024	9205 mm

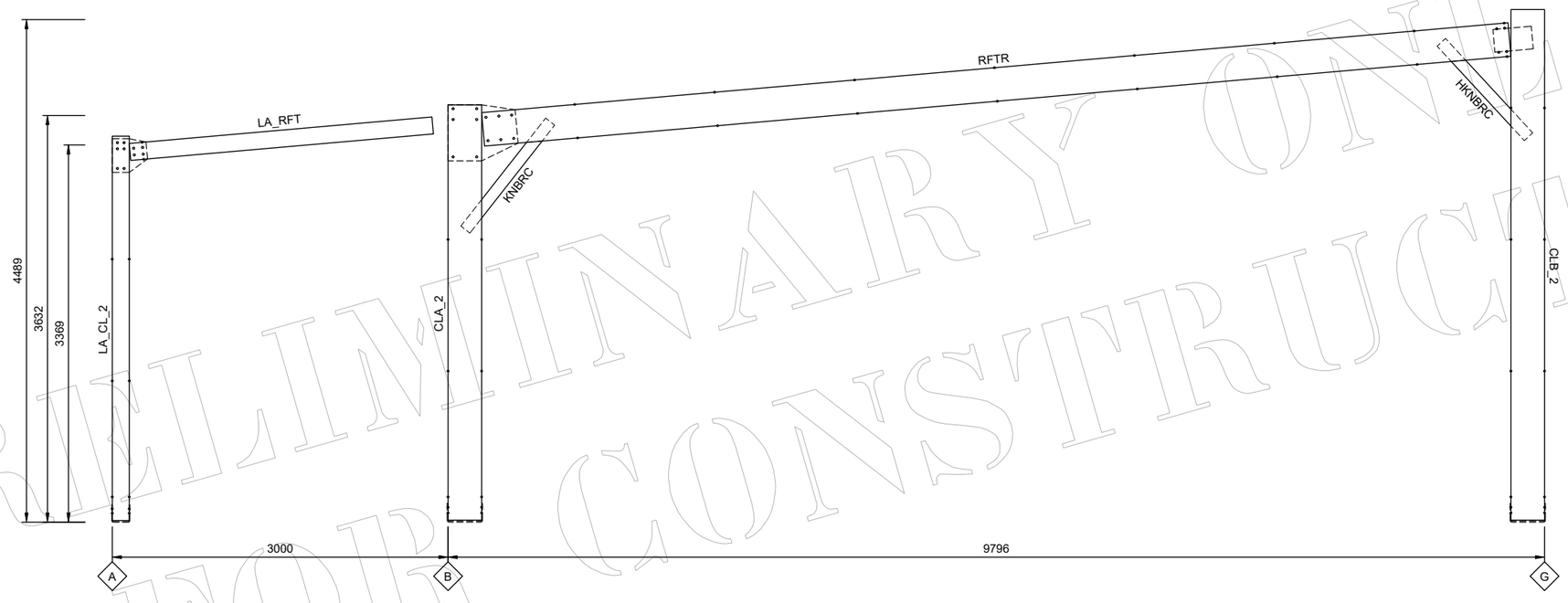

1/6 Portal Section

SCALE: 1:50

Frame Lines 2 and 3

PRELIMINARY ONLY
NOT FOR CONSTRUCTION

This illustration is for reference only, and is to be used to supplement the engineering drawings. If any discrepancies occur, the engineering plans will always take precedence.

Portal Frame Sections

JOBNO HGOR98570130
SHEET 6 of 16

DATE 11-12-2024
SCALE 1:50

Attachment 1111

MEMBER TABLE		
Mark	Product	Length
CLA_1	C30024	3727 mm
CLB_1	C30024	4579 mm
EMULB_1	C15019	3897 mm
EMULB_2	C15019	4188 mm
LA_CL_3	C15015	3448 mm
LA_RFT	C15015	2714 mm
RFTR	C30024	9205 mm

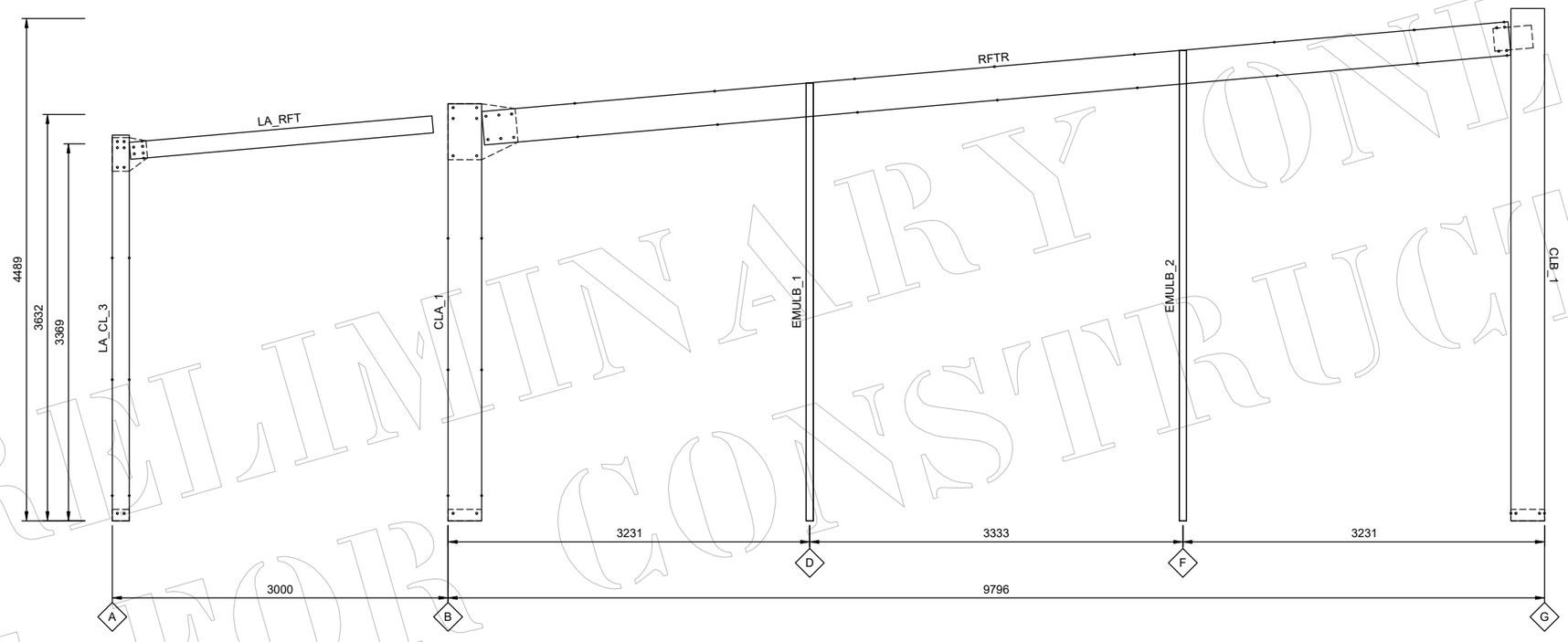

1/7 Portal Section

SCALE: 1:50

Frame Line 4

PRELIMINARY ONLY
NOT FOR CONSTRUCTION

This illustration is for reference only, and is to be used to supplement the engineering drawings. If any discrepancies occur, the engineering plans will always take precedence.

Portal Frame Sections

JOBNO	HGOR98570130	DATE	11-12-2024
SHEET	7 of 16	SCALE	1:50

Attachment 11.11

MEMBER TABLE		
Mark	Product	Length
EP01	C10019	3667 mm
LAPLN01	Z10019	3967 mm
LAPLN02	Z10019	3967 mm
LAPLN03	Z10019	4267 mm
PLN01	Z10019	3967 mm
PLN02	Z10019	3967 mm
PLN03	Z10019	4267 mm

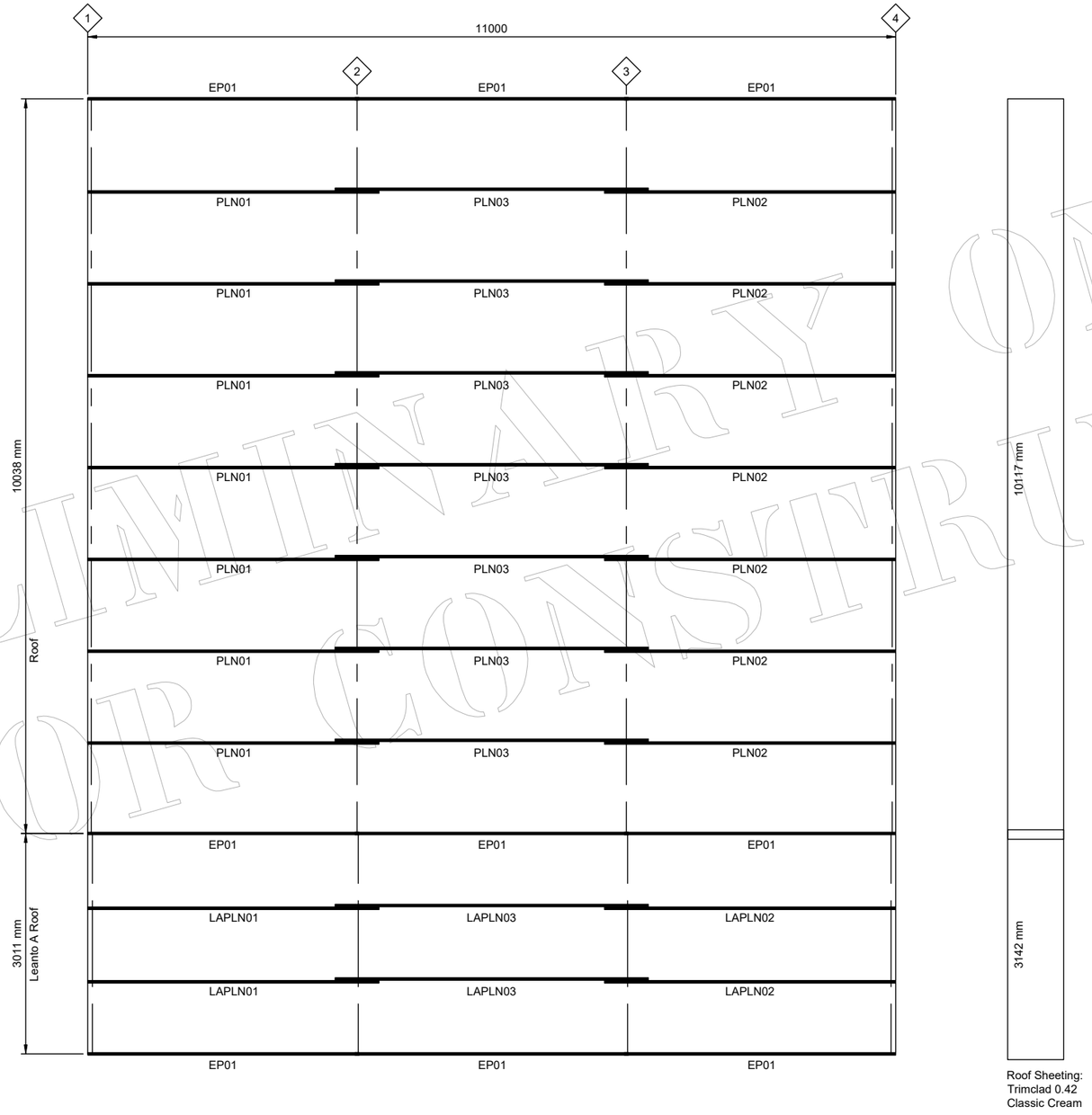

PRELIMINARY ONLY
NOT FOR CONSTRUCTION

This illustration is for reference only, and is to be used to supplement the engineering drawings. If any discrepancies occur, the engineering plans will always take precedence.

Roof Framing Plan

JOBNO	HGOR98570130	DATE	11-12-2024
SHEET	8 of 16	SCALE	1:75

Attachment 11.1.1

MEMBER TABLE		
Mark	Product	Length
EP01	C10019	3667 mm
G13	Z10012	3967 mm
G14	Z10012	3967 mm
G17	Z10012	4267 mm
OH02	C10012	1274 mm
OJ01	C10015 Channel	2350 mm
↑ OUTSIDE FLANGE OF GIRT POINTS UP		
↓ OUTSIDE FLANGE OF GIRT POINTS DOWN		

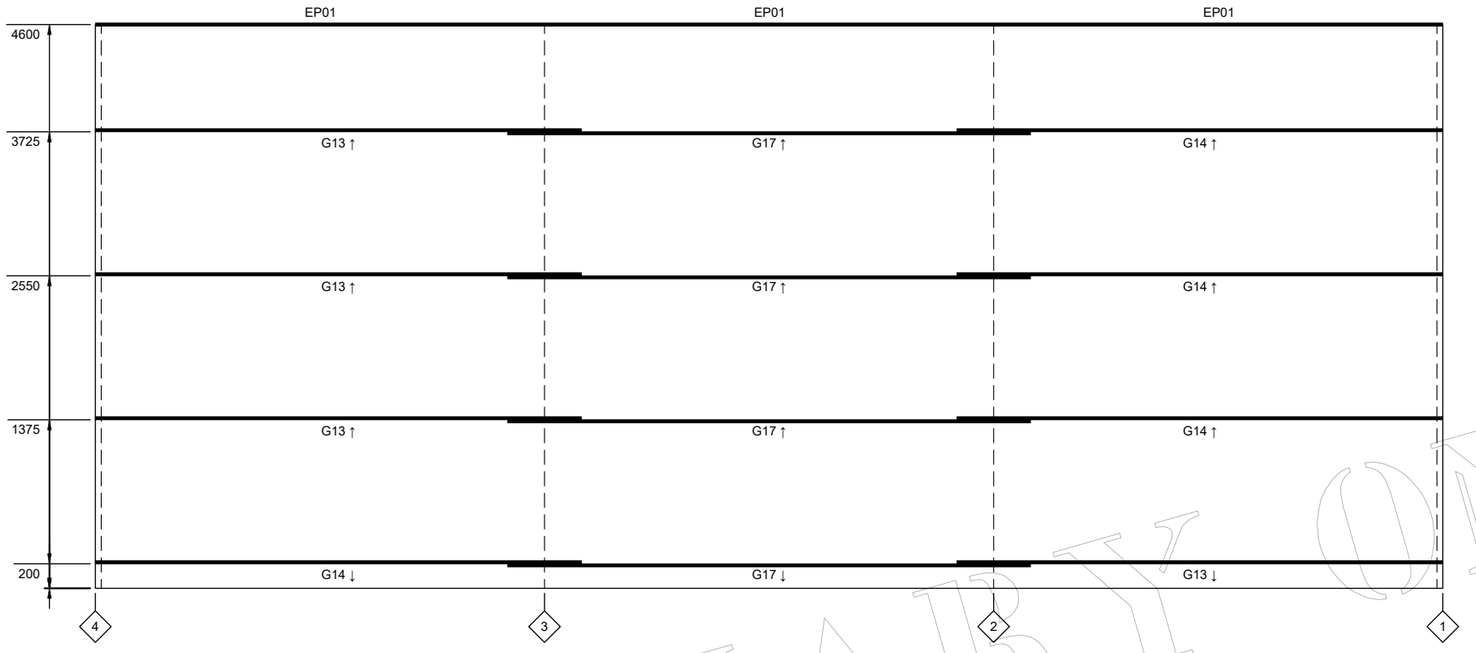

2/9 Sidewall B Girt Layout

SCALE: 1:50

Frame Line G

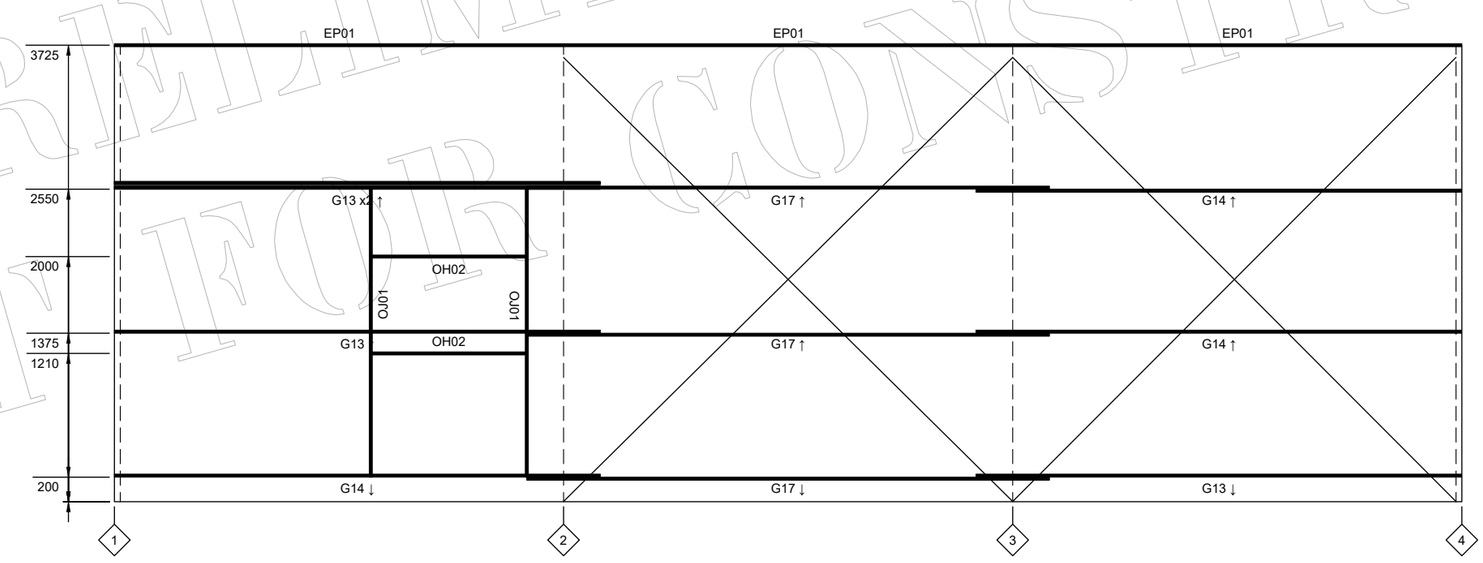

1/9 Sidewall A Girt Layout

SCALE: 1:50

Frame Line B

PRELIMINARY ONLY
NOT FOR CONSTRUCTION

This illustration is for reference only, and is to be used to supplement the engineering drawings. If any discrepancies occur, the engineering plans will always take precedence.

Girt Layout	HiTen	JOBNO	HGOR98570130	DATE	11-12-2024
		SHEET	9 of 16	SCALE	1:50

Attachment 11.1.1

MEMBER TABLE		
Mark	Product	Length
10ZA100G/1BV	50x50 Angle	Stock Length
G01	Z10012	278 mm
G03	Z10012	2570 mm
G04	Z10012	2898 mm
G05	Z10012	2898 mm
G08	Z10012	3580 mm
G09	Z10012	3580 mm
OH01	C10012	840 mm
OH02	C10012	1274 mm
OH03	C10012	3000 mm
OJ02	C10015 Channel	2933 mm
OJ03	C10015 Channel	3133 mm
OJ05	Z25024	3873 mm
OJ06	Z25024	4135 mm
↑ OUTSIDE FLANGE OF GIRT POINTS UP		
↓ OUTSIDE FLANGE OF GIRT POINTS DOWN		

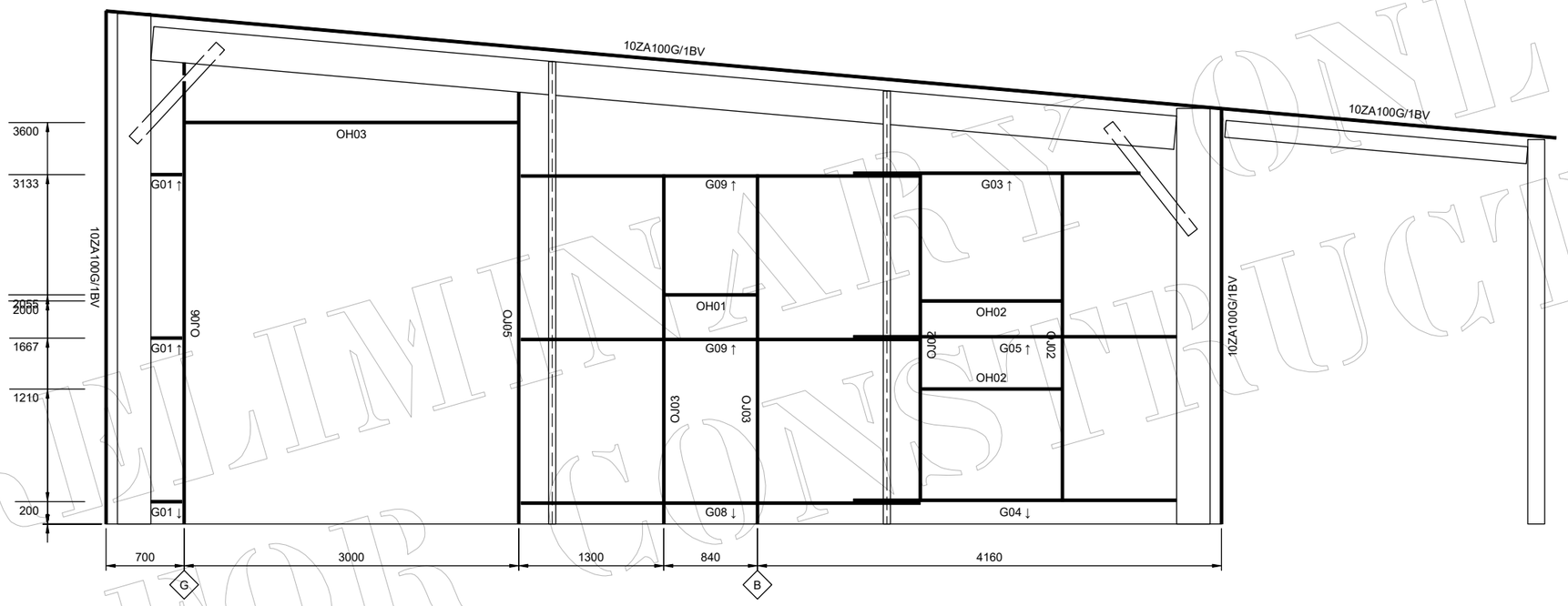

1/10 Endwall A Girt Layout

SCALE: 1:50

Frame Line 1

PRELIMINARY ONLY
NOT FOR CONSTRUCTION

This illustration is for reference only, and is to be used to supplement the engineering drawings. If any discrepancies occur, the engineering plans will always take precedence.

Girt Layout	HiTen	JOBNO	HGOR98570130	DATE	11-12-2024
		SHEET	10 of 16	SCALE	1:50

Attachment 11.1.1

MEMBER TABLE		
Mark	Product	Length
10ZA100G/1BV	50x50 Angle	Stock Length
G02	Z10012	2848 mm
G06	Z10012	3231 mm
G07	Z10012	3231 mm
G10	Z10012	3933 mm
OH01	C10012	840 mm
OH02	C10012	1274 mm
OJ03	C10015 Channel	3133 mm
OJ04	C10019 Channel	3133 mm
↑ OUTSIDE FLANGE OF GIRT POINTS UP		
↓ OUTSIDE FLANGE OF GIRT POINTS DOWN		

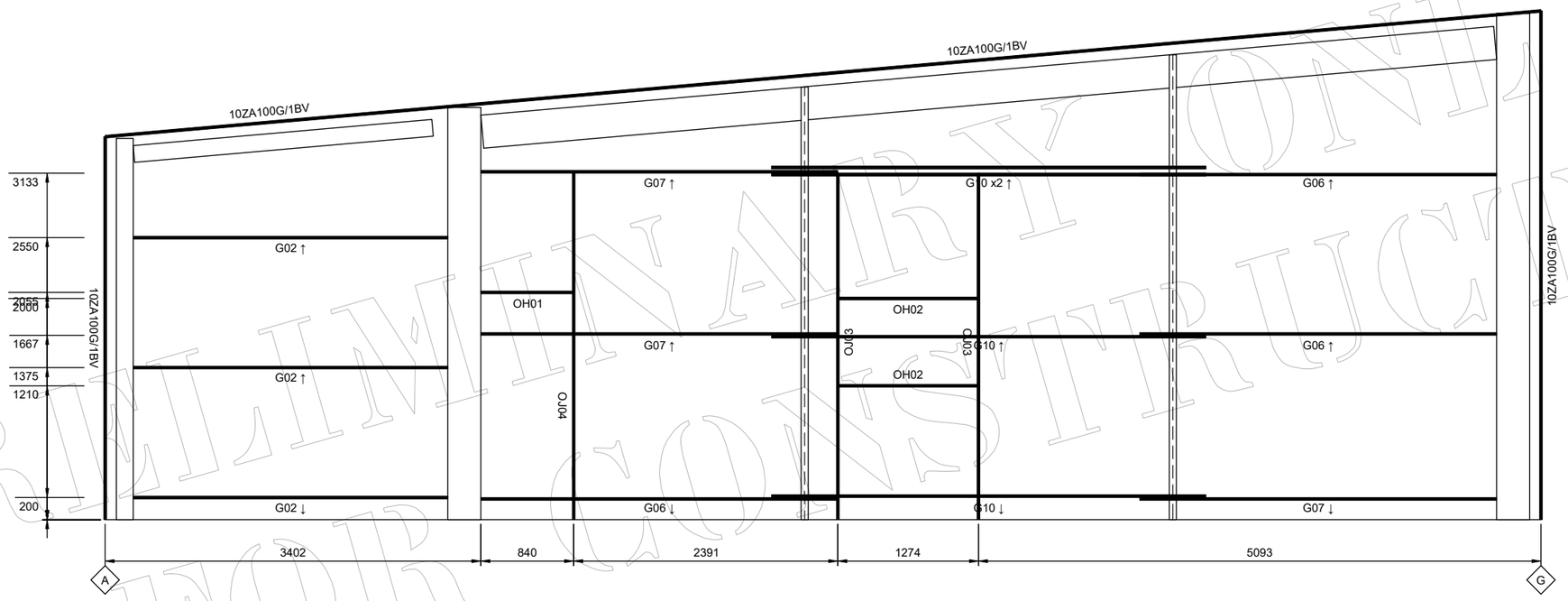

1/11 Endwall B Girt Layout

SCALE: 1:50

Frame Line 4

PRELIMINARY ONLY
NOT FOR CONSTRUCTION

This illustration is for reference only, and is to be used to supplement the engineering drawings. If any discrepancies occur, the engineering plans will always take precedence.

Girt Layout	JOBNO HGOR98570130 SHEET 11 of 16	DATE 11-12-2024 SCALE 1:50		

Attachment 11.1.1

MEMBER TABLE		
Mark	Product	Length
EP01	C10019	3667 mm
G11	Z10012	3967 mm
G12	Z10012	3967 mm
G15	Z10012	3999 mm
G16	Z10012	3999 mm
↑ OUTSIDE FLANGE OF GIRT POINTS UP		
↓ OUTSIDE FLANGE OF GIRT POINTS DOWN		

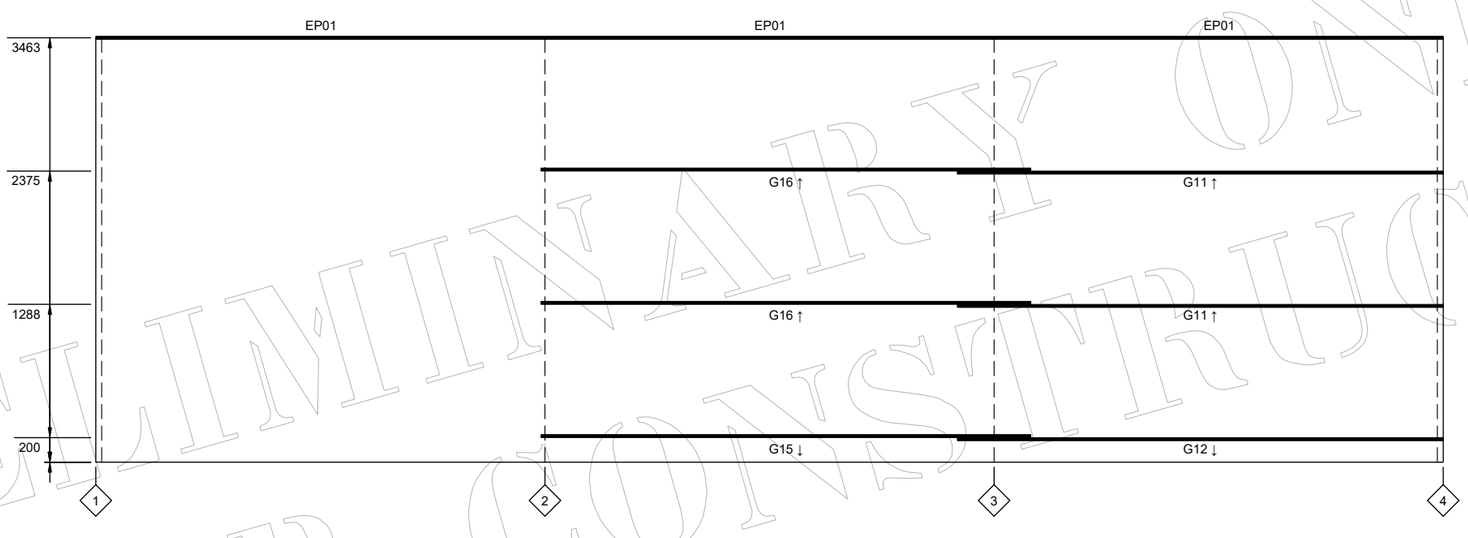

1/12 Leanto A Sidewall Girt Layout

SCALE: 1:50

Frame Line A

PRELIMINARY ONLY
NOT FOR CONSTRUCTION

This illustration is for reference only, and is to be used to supplement the engineering drawings. If any discrepancies occur, the engineering plans will always take precedence.

Girt Layout	HiTen	JOBNO	HGOR98570130	DATE	11-12-2024
		SHEET	12 of 16	SCALE	1:50

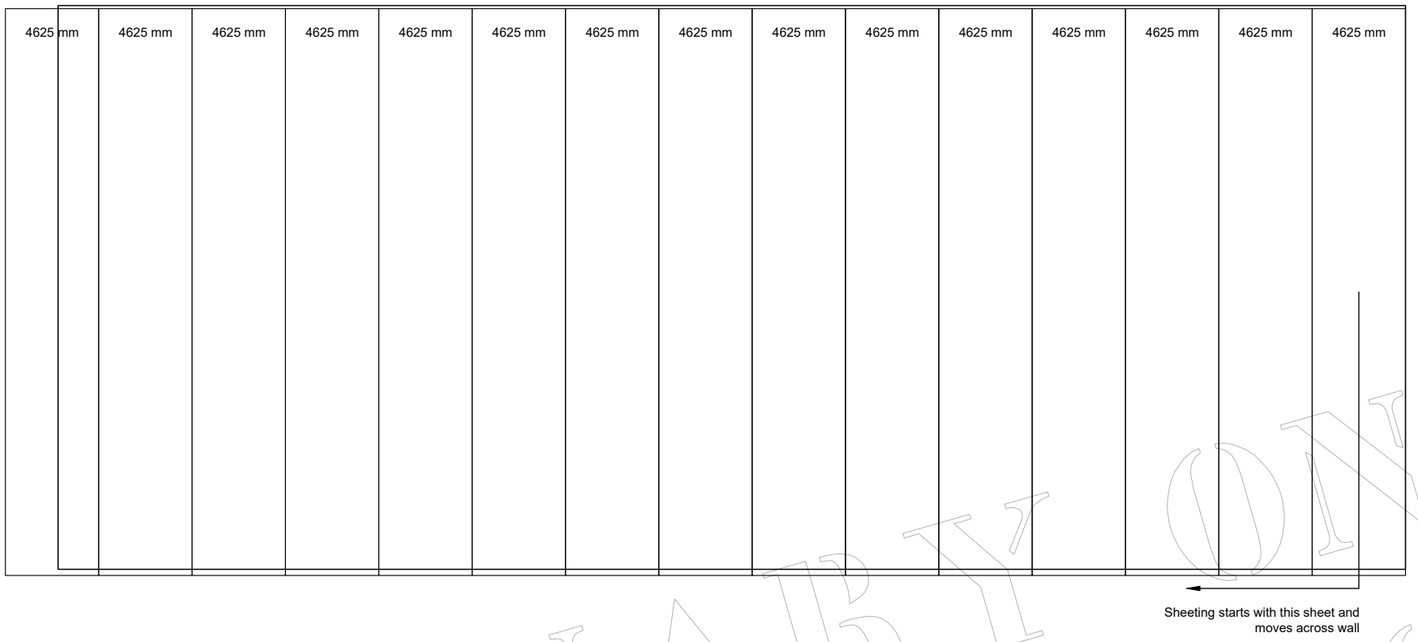

2 / 13 Sidewall B Sheeting Layout

SCALE: 1:50

Frame Line G

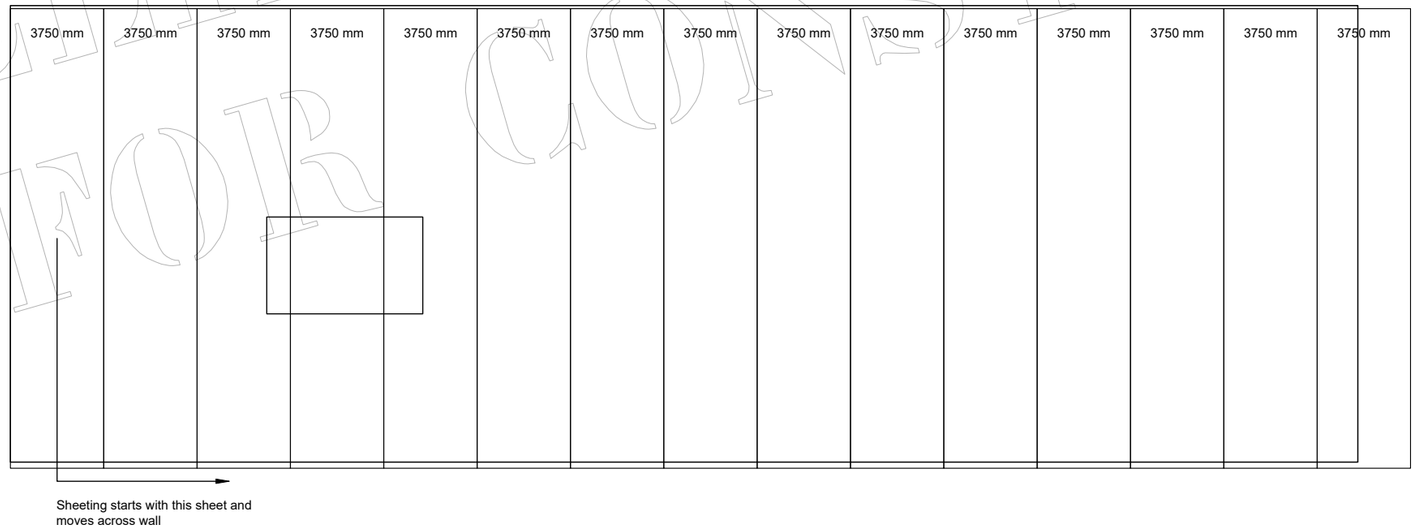

1 / 13 Sidewall A Sheeting Layout

SCALE: 1:50

Frame Line B

PRELIMINARY ONLY
NOT FOR CONSTRUCTION

This illustration is for reference only, and is to be used to supplement the engineering drawings. If any discrepancies occur, the engineering plans will always take precedence.

Sheeting Layout	HiTen	JOBNO	HGOR98570130	DATE	11-12-2024
		SHEET	13 of 16	SCALE	1:50

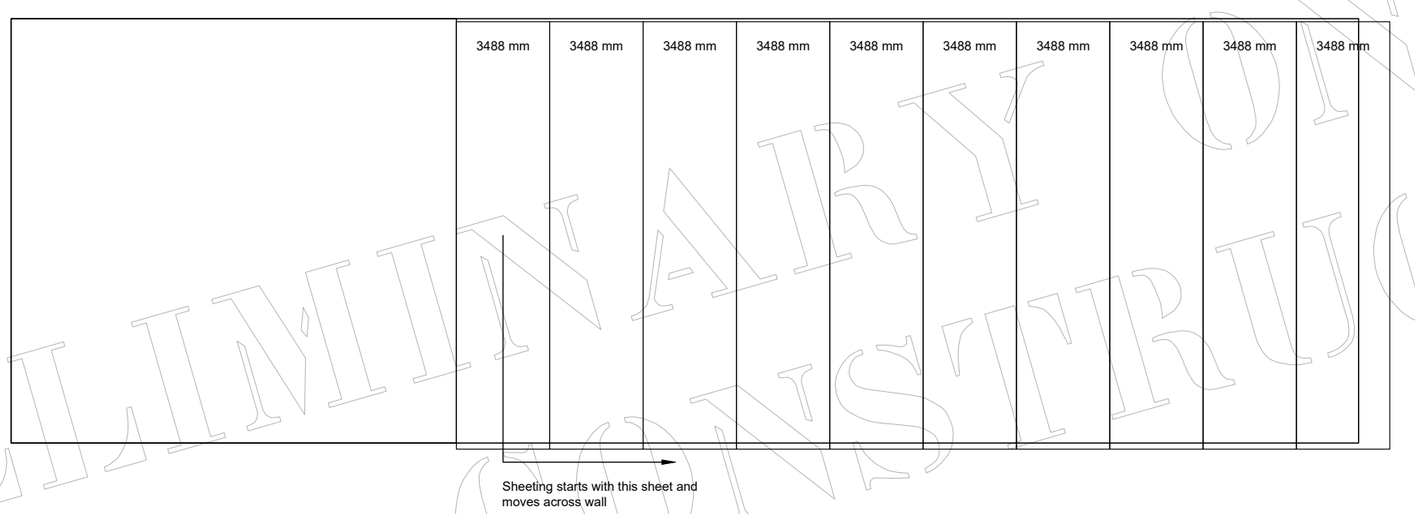

1
14

Leanto A Sidewall Sheeting Layout

SCALE: 1:50

Frame Line A

PRELIMINARY ONLY
NOT FOR CONSTRUCTION

This illustration is for reference only, and is to be used to supplement the engineering drawings. If any discrepancies occur, the engineering plans will always take precedence.

Sheeting Layout	HiTen	JOBNO	HGOR98570130	DATE	11-12-2024
		SHEET	14 of 16	SCALE	1:50

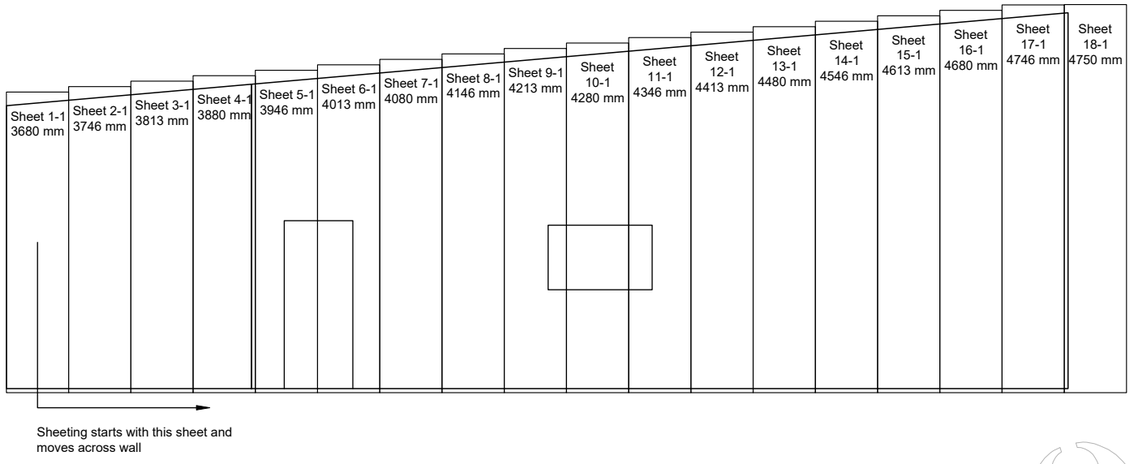

2/15 Endwall B Sheeting Layout

SCALE: 1:75

Frame Line 4

PRELIMINARY ONLY
NOT FOR CONSTRUCTION

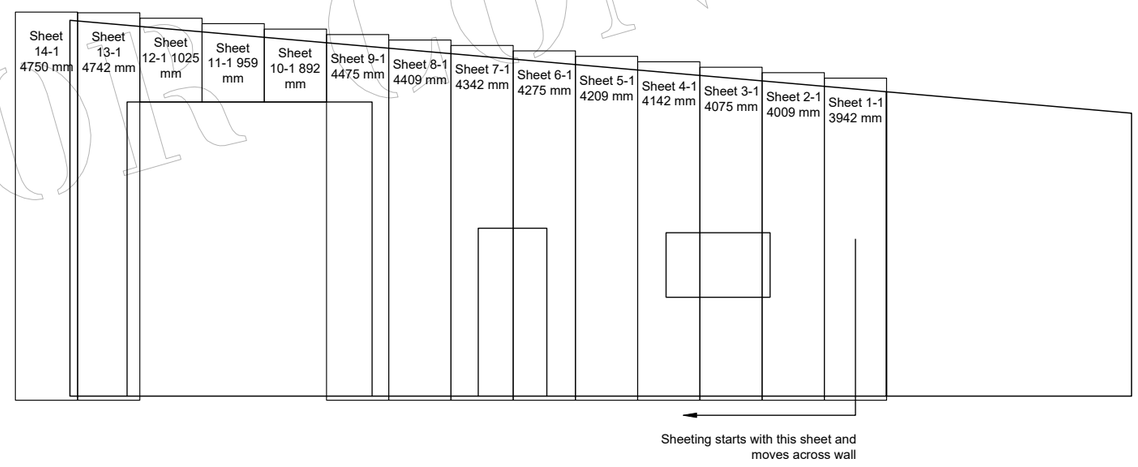

1/15 Endwall A Sheeting Layout

SCALE: 1:75

Frame Line 1

This illustration is for reference only, and is to be used to supplement the engineering drawings. If any discrepancies occur, the engineering plans will always take precedence.

Sheeting Layout	Hilen	JOBNO HGOR98570130 SHEET 15 of 16	DATE 11-12-2024 SCALE 1:75	ACT	

Generic Temporary Bracing Information
The installation of temporary bracing is critical to avoid building collapse or damaging structural movement during construction. This collapse can occur with no notice and as such the installation of appropriate temporary bracing is critical to avoid damage, injury, and possible death. Determination, procurement, and correct installation of temporary bracing is the responsibility of the builder / primary contractor / installer.

Bracing Materials
The constructor / installer is to supply suitably sized materials for temporary bracing. These materials are generally capable of tension, but in some circumstances will need to be capable of tension and compression. Load rated ratchet strapping of an appropriate size can be used to temporarily 'x-brace' bays in both directions, until the final bracing systems are fullyinstalled. This is especially critical for buildings where X Bracing is not required in the final structure due to the use of moment frames or diaphragm bracing.

Temporary Bracing Location
The location of Temporary bracing will depend on the installation method used. Installation should be completed in accordance with the Construction Package, Engineering Plans, and Instruction Manuals. If the Frame First Method (most common) is used, then the use of tension only bracing and creating temporarily braced bays as per Fig 1 and Fig 2. can be used. As a basic guide, a minimum of every 4th bay should have temporary bracing installed as per Fig 2.

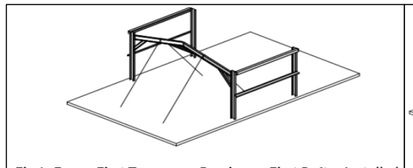
Fig 1. Frame First Temporary Bracing on First Rafter Installed

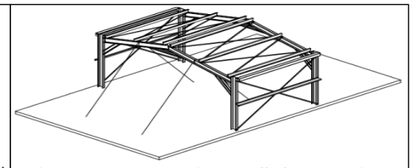
Fig 2. Temporary Bracing Installed as X Bracing

If the Tilt Up Method Is used (where walls are constructed on the ground And then tilted into place), then the tops of columns are braced with a tension and compression brace in the same direction Fig 3. Then rafters and purlins can be installed with temporary bracing holding rafters in place (similar to Fig 1) until final bracing of diaphragm sheeting is installed.

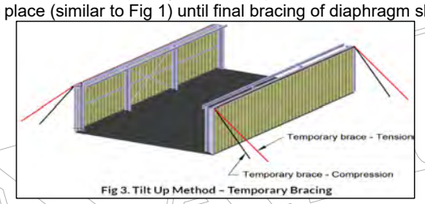

Fig 3. Tilt Up Method – Temporary Bracing

Typically, braces should be positioned diagonally across the structure from the top to the bottom, intersecting near the midpoint to provide stability, optimally at a 45-degree angle but no less than a 20-degree angle. The connection strength of temporary bracing is a critical consideration and these connections must be capable of resisting the potentially substantial temporary bracing loads – whether this connection point be to the building, the foundations or to the ground. Dependent upon building size this may include heavy angles and post installed concrete anchors. The temporary bracing methods used must be capable of fully stabilising the structure during the construction process.

Additional Temporary Bracing
The temporary bracing described is a minimum requirement for a standard-sized building in average conditions. Additional consideration should be given to larger building spans and/or challenging site conditions. There may also be an increased risk in relation to partially completed buildings and exposed sites. It is recommended that extra temporary bracing is utilized if moderate wind speeds are expected on site. Additional support elements, such as steel cables may need to be introduced that can be attached to the building's framework and anchored to the ground or other stable structures to provide extra stability. The frame should remain rigid throughout and such responsibility lies with the constructor. Buildings should not be left in a partially completed state longer than necessary.

Bracing Removal
The temporary bracing should not be removed until all purlins, girts and permanent cross bracing, diaphragm bracing or moment frames where used are installed. The temporary bracing is to remain in place where possible, until the roof and wall cladding is fully installed. If you need any further information regarding the installation of temporary bracing or are at all unsure of the necessary requirements for this specific building, there are guides available through various industry bodies:

https://www.safeworkaustralia.gov.au/ 'Construction work – steel erection. Information sheet', 2016.
https://www.steel.org.au/ 'Structural steelwork fabrication and erection code of practice', 2014.
https://www.standards.org.au/ AS/NZS 5131:2016 'Structural steelwork – Fabrication and erection.

Support is also available at support@actbuildingsystems.com.

THE ABOVE INFORMATION REGARDING TEMPORARY BRACING DOES NOT FORM PART OF THE ENGINEERING CERTIFICATION FOR THIS DESIGN AND IS PROVIDED AS A GUIDE TO AID INSTALLATION ONLY.

PRELIMINARY ONLY
NOT FOR CONSTRUCTION

DEVELOPMENT APPLICATION CHEAT SHEET

GL CODE	DESCRIPTION OF DEVELOPMENT	INSERT DEVELOPMENT COST	FEE
104200	Estimated development cost no more than $50,000	N/A	**$147.00**
104200	Estimated development cost from $50,001 to $500,000	$65,621.00	**$209.99**
104200	Estimated development cost from $500,001 to $2.5 million		
104200	Estimated development cost from $2.5 million to $5 million		
104200	Estimated development cost from $2.5 million to $5 million		
104200	Estimated development cost from $5 million to $21.5 million		
104200	Estimated development cost of more than $21.55 million	N/A	**$34,196.00**
104200	Amendment or cancellation of a development approval, including reconsideration of conditions	MINIMUM FEE APPLIES	**$295.00**
104200	Change of Use	N/A	**$295.00**
104200	Home Business, Home Occupation or Cottage Industry Application		**$220.00**
104200	Home Occupation Renewal Fee (where application is made before expiry)		**$73.00**
104200	Extractive Industry Application		**$739.00**
104200	Re-approval of previously approved development application	AS QUOTED - BASED ON HOURLY RATES UNDER P&D REGULAIONS WITH A MINIMUM FEE OF $147.00	
104200	Additional penalty if development has commenced	TWICE THE AMOUNT OF MAXIMUM FEE PAYABLE	
104200	Application for advice that a development approval is not required (Sch.2 cl.61A *Planning and Development (Local Planning Schemes) Regulations 2015*	N/A	**$295.00**
104200	Development Assessment Panel Fees	AS QUOTED IN SCH.1 *PLANNING & DEVELOPMENT (DEVELOPMENT ASSESSMENT PANEL) REGULATIONS*	

Attachment 11.1.1

Shire of Woodanilling

RECEIPT / TAX INVOICE

ABN: 3134 7768 534

[redacted]

Receipt Number: 16394
Receipt Date : 06.03.25

RECEIPT TYPE	DETAIL	AMOUNT
Miscellaneous	Town Planning Application Fee [redacted] Proposed Shed DA65 - A706 Account: 11042000	$209.99

PAYMENT METHOD

Cash: $ 0.00
Cheque: $ 0.00
Other: $ 209.99

GST	*$0.00*
Total	**$209.99**
Tendered	$209.99
Change Given	$0.00

Shire of WOODANILLING

PO BOX 99
WOODANILLING WA 6316

Ph: (08) 9823 1506
Fax: (08) 9823 1526

fo@woodanilling.wa.gov.au
www.woodanilling.wa.gov.au

Local Planning Policy No 2
Sheds / Outbuildings

Policy Area

This Policy applies to the whole Shire.

Objective

In order to clarify the interpretation and application of Scheme provisions in relation to the development of sheds (outbuildings) and to maintain the character of the Shire and to ensure an adequate standard of residential accommodation.

Background

Town Planning Scheme No 1 does not specifically define or list outbuildings as a separate use of land.

Within 'residential' areas outbuildings when developed in conjunction with a house are governed by the provisions of the Residential Design Codes (2015) and are defined as an enclosed non-habitable structure that is detached from any dwelling.

Carports and garages which abut or are attached to a dwelling are not included in this Policy.

Clause 8.2 (b)(iv) of the Scheme nominates the acceptable standards for outbuildings are a maximum area of 72 m^2 with a maximum height of 4.2m.

Clause 5.4.3 of the R Codes requires that outbuildings do not detract from the streetscape or the visual amenity of residents or neighbouring properties.

Within 'rural' areas outbuildings are normally considered as being ancillary to the main use of the property. Such uses defined within the Scheme include,

Use Class	Regional Rural	Local Rural
Agriculture - extensive	P	P
Agriculture - intensive	D	D
Industry - rural	D	A
Rural home business	D	A
Rural pursuit	P	D

Setback from lot boundaries *		
All boundaries	20m	
Front and rear		10m
Side		5m

Clause 5.5 of the Scheme allows Council to consider variations to the setbacks from boundaries.

Policy Statement

1. Outbuildings will not require Planning Approval from Council in the Residential and Local Rural Zones provided that:
   - A dwelling already exists on the lot subject to the application;
   - The aggregate of all outbuildings does not exceed 72 m2 in size;
   - The outbuilding does not exceed 4.2m in height;
   - All buildings Are setback from lot boundaries in accordance with the R Codes and BCA requirements; and
   - The outbuilding in the Residential Zone is placed behind the main residential building line. The building line means the setback of the existing dwelling even where this is greater than prescribed in the Scheme.

2. Outbuildings in the Regional Rural Zone do not require a Planning Approval provided that they are to be setback more than 20m from any lot boundaries; unless a reduced setback is approved by Council. This includes farm buildings and sheds provided that they are not being used for commercial or industrial uses as defined or classified by the Scheme;
3. Outbuildings in the Commercial and Industrial Zones require a Planning Approval;
4. Outbuildings will not be approved on vacant land within the Residential Zone.
5. Outbuildings are not to be used for human habitation at any time.
6. Council in considering any application for an outbuilding will have specific regard to the proposed use and location of the outbuilding and how this might impact on the surrounding properties. It may require any such applications to be advertised and may (if it approves any such application) impose conditions relating to:-
   - The provision of landscaping;
   - In the Residential and Local Rural Zones the use of non-reflective natural colours which blend with the natural landscape;
   - The site being so ordered and maintained as not to prejudicially affect the amenity of the locality by reason of appearance
   - Ensuring that the outbuilding shall only be used for purposes incidental to the residential or rural use of the property.

Adoption

Adopted by Council at its meeting of 20 December 2005

Amended by Council at its meeting of 15 July 2008

Amended by Council at its meeting of 18 October2011

Amended by Council at its meeting of 20 December 2011

Amended by Council at its meeting of 19 September 2017

Attachment 12.1.1

ISUZU UTE
GO YOUR OWN WAY

Edwards Isuzu UTE
ABN 46 263 705 996
T 08 9881 5555 F 08 9881 5500
E admin.ngn@smvg.com.au

126 Federal Street
Narrogin WA 6312

QUOTE

Quote No.:	Q-1324	**Date Issued:**	01-NOV-24	**Salesman:**	BRENTON PILAWSKAS
Order Number:				**Preferred Delivery Date:**	

CUSTOMER(S)

Name	SHIRE OF WOODANILLING	**Phone (H)**		**Fax**	
		Phone (W)	98231506	**ACN**	
		Mobile	0428231506	**ABN**	31347768534
Address	PO BOX 99	**Licence No**		**DOB**	
	31 ROBINSON RD	**Email**	fo@woodanilling.wa.go.au		
	WOODANILLING WA 6316				

VEHICLE SPECIFICATIONS

Model Description	24MY D-MAX 4X2 SINGLE CAB C/CHASIS AUTO 1.9L	
Make / Carline	ISUZU / D-MAX	/
Model Code	TOR4024	
Stock Type	NEW	
Colour / Trim	WHITE / CLOTH	
Transmission Type / Fuel Type	AUTO / DIESEL	/
Body Type / Engine Type	CAB CHASSIS / 1.9L DIESEL	/
Conditions		

VEHICLE PRICING

RRP	31,650.00
ALLOY SIDE STEPS (Accessory)	990.00
CANVAS SEAT COVERS (Accessory)	300.00
STEEL BULL BAR (Accessory)	3,000.00
TOW BAR (7-Pin PLUG) (Accessory)	1,300.00
UHF RADIO (Accessory)	600.00
INSPECTION, WEIGH ETC (Accessory)	180.00
ISUZU GP ALLOY TRAY WITH WINDOW PROTECTO	3,433.00
2 X LED BEACONS MOUNTED ON CAB RAIL	880.00
less Discount	4,691.82
SUB-TOTAL (exc GST)	**37,641.18**
GST	3,764.12
PRICE BEFORE ON ROAD COSTS	**41,405.30**
Stamp Duty (calculated on 0.00)	0.00
PURCHASE PRICE	**41,405.30**

VEHICLE SPECIFICATIONS

Model Description	24MY D-MAX 4X4 SINGLE CAB CAB CHASSIS AUTO 3.0L		
Make / Carline	ISUZU / D-MAX	**Stock # / Rego**	/
Model Code	TOR4004	**VIN**	
Stock Type	NEW	**Chassis**	
Colour / Trim	WHITE / CLOTH	**Engine #**	
Transmission Type / Fuel Type	AUTO /	**Build MMYY / Compliance MMYY**	/
Body Type / Engine Type	CAB CHASSIS / 3.0L	**Original Kilometres / Rego Due**	/
Conditions			

NOVA © Copyright 2008-15

VEHICLE PRICING

Attachment 12.1.1

RRP	40,700.00
ALLOY SIDE STEPS (Accessory)	990.00
CANVAS SEAT COVERS (Accessory)	300.00
INSPECTION, WEIGH ETC (Accessory)	180.00
STEEL BULL BAR (Accessory)	3,000.00
TOW BAR (7-Pin PLUG) (Accessory)	1,300.00
UHF RADIO (Accessory)	600.00
ISUZU GP ALLOY TRAY WITH WINDOW PROTECTO	3,433.00
2 X LED BEACONS MOUNTED ON CAB RAIL	880.00
less Discount	6,518.18
SUB-TOTAL (exc GST)	**44,864.82**
GST	4,486.48
PRICE BEFORE ON ROAD COSTS	**49,351.30**
Stamp Duty (calculated on 0.00)	0.00
PURCHASE PRICE	**49,351.30**

PRICING SUMMARY

24MY D-MAX 4X2 SINGLE CAB C/CHASIS AUTO 1.9L		$41,405.30
24MY D-MAX 4X4 SINGLE CAB CAB CHASSIS AUTO 3.0L		$49,351.30
less Trade-in Allowance (inc GST)		$12,000.00
MAHINDRA SINGLE CAB 4X4, WO244, 70000 Kms, Build MMYY 0119	$8,500.00	
RANGER PK SINGLE CAB 4X2, WO003, 173000 Kms, Build MMYY 0109	$3,500.00	
BALANCE PAYABLE		**$78,756.60**
Cash Payment		$78,756.60

Dealer Signature

Customer Signature

Date

NOVA © Copyright 2008-15

Great Southern Toyota

Attachment 12.1.2

QUOTATION

Great Southern Toyota
158 Clive Street,
Katanning, WA 6317
PO Box 808
ABN 26 009 460 682
DL 15270 MRB 1556

T 08 9821 7100

accounts@greatsoutherntoyota.com.au
greatsoutherntoyota.com.au

QUOTATION FOR :

Shire Of Woodanilling
Po Box 99
Woodanilling WA 6316
E: emi@woodanilling.wa.gov.au;LH@woodanilling.wa.gov.
P: 0898231506

DATE : 09/04/2025
QUOTE : **53827 (1)** CUSTOMER : K6791
DEPT : 311 Katanning New Veh Fleet
REP : Darryl Carpenter
STOCK No :

QUOTATION DETAILS	PRICE	
MOTOR VEHICLE		
HiLux 4x2 2.7L Pet S/C/C 6AT WorkMate 2L48300 001	$29,730.00	Factory Option (DY)
Approved Government	$2,585.00–	
ACCESSORIES / OPTIONS		
FACTORY OPTIONS		
Vehicle Colour – Glacier White	No Charge	
Vehicle Trim – Black Fabric	No Charge	
WorkMate	No Charge	(Factory Fitted Option)
GENUINE ACCESSORIES		
Rear Window protector – Steel – Trundle GPA tray only	$394.31	
Tow Bar Tongue Kit (Long) with 12 Pin Flat Plug [For 2550mm/2100mm/1800mm Tray]	$1,619.87	
Fitted Tray Body – 2550mm – General Purpose Alloy (GPA)	$3,149.84	
NON–GENUINE ACCESSORIES		
Narrow Body Summit Bull Bar	$4,291.00	
Summit Narrow Body Steps	$2,053.00	
Black Duck 4 Elements Seat Covers in Black	$595.00	
Trak 80 UHF Radio & Black Hawk Aerial	$997.00	
X2 Low Profile Amber Lights on Cab Mount	$425.00	
DEALER CHARGES		
Dealer Delivery	$1,895.00	
Complementary Full Tank of Fuel	No Charge	
TOTAL PRICE	$42,565.02	Inc. GST
ON ROAD COSTS		
12 Months Registration	$1,062.00	
TOTAL PAYABLE	$43,627.02	
Includes GST $3,869.55		
BALANCE PAYABLE	$43,627.02	

Great Southern Toyota

Attachment 12.1.2

QUOTATION

Great Southern Toyota
158 Clive Street,
Katanning, WA 6317
PO Box 808
ABN 26 009 400 082
DL 15270 MRB 1556

T 08 9821 7100

accounts@greatsoutherntoyota.com.au
greatsoutherntoyota.com.au

QUOTATION FOR :

Shire Of Woodanilling
Po Box 99
Woodanilling WA 6316
E: emi@woodanilling.wa.gov.au;LH@woodanilling.wa.gov.
P: 0898231506

DATE : 09/04/2025
QUOTE : **53829 (2)** CUSTOMER : K6791
DEPT : 311 Katanning New Veh Fleet
REP : Darryl Carpenter
STOCK No :

QUOTATION DETAILS	PRICE	
MOTOR VEHICLE		
HiLux 4x4 2.8L Dsl D/C/C 6AT SR + Steel Wheels 2L46690 001	$53,105.00	Factory Option (ZT)
Approved Government	$5,555.00-	
ACCESSORIES / OPTIONS		
FACTORY OPTIONS		
Vehicle Colour - Glacier White	No Charge	
Vehicle Trim - Black Fabric	No Charge	
SR + Steel Wheels	No Charge	(Factory Fitted Option)
GENUINE ACCESSORIES		
Rear View Camera - For Tray Body	$786.90	
Steel Bull Bar - Commercial	$2,923.50	
Side Steps - Heavy Duty	$1,506.67	
Front Canvas Seat Covers	$438.16	
Rear Canvas Seat Cover	$409.01	
Rear Window protector - Steel - GPA tray only	$280.42	
Tow Bar Tongue Kit (Long) with 12 Pin Flat Plug [For 2550mm/2100mm/1800mm Tray]	$1,619.87	
Fitted Tray Body - 1800mm - Heavy Duty Alloy (HDA)	$3,486.74	
NON-GENUINE ACCESSORIES		
X2 Low Profile Amber Lights on Cab Mount	$425.00	
Trak 80 UHF Radio & Black Hawk Aerial	$997.00	
DEALER CHARGES		
Dealer Delivery	$1,895.00	
Complementary Full Tank of Fuel	No Charge	
TOTAL PRICE	$62,318.27	Inc. GST
ON ROAD COSTS		
12 Months Registration	$1,062.00	
TOTAL PAYABLE	$63,380.27	

Great Southern Toyota

Attachment 12.1.2

QUOTATION

Great Southern Toyota
158 Clive Street,
Katanning, WA 6317
PO Box 808
ABN: 26 009 400 682
DL 15270 MRB 1566

T 08 9821 7100

accounts@greatsoutherntoyota.com.au
greatsoutherntoyota.com.au

QUOTATION FOR :	QUOTE DETAILS
Shire Of Woodanilling Po Box 99 Woodanilling WA 6316 E: emi@woodanilling.wa.gov.au;LH@woodanilling.wa.gov. P: 0898231506	DATE : 09/04/2025 QUOTE : **53829 (2)** CUSTOMER : K6791 DEPT : 311 Katanning New Veh Fleet REP : Darryl Carpenter STOCK No :

QUOTATION DETAILS	PRICE
Includes GST $5,665.30	
BALANCE PAYABLE	$63,380.27

*NOTE – This quotation is valid for 7 days if signed by a manager and is subject to manufactures price increases.

Darryl Carpenter
Salesman

Authorised Manager

Attachment 13.1.1

SHIRE OF WOODANILLING
STATEMENT OF PAYMENTS
FOR THE PERIOD 31 MARCH 2025

Transaction ID	Date	Name	Description	Amount
Municipal Account				
EFT Payments				
EFT7724	07/03/2025	Hudson Sewage Services	2 x Quarterly Biomax Service- September 2024 & December 2024	$772.56
EFT7725	07/03/2025	Dhu South Electrical	Supply & Install 2 x reverse cycle spilt system TCL Inverter- 3347 Robinson Road, Suply & Install 1 x reverse cycle spilt system TCL Inverter- 3340 Robinson Road, Inspect faulty light pole- Cenetary Park, Supply & Install new weatherproof GPO for Gas Hot Water System- 3347 Robinson Road	$6,915.66
EFT7726	07/03/2025	Edge Planning & Property	Planning Services- 9.75hours @ $143.00 per hour- December 2024 to January 2025	$1,533.67
EFT7727	07/03/2025	WA Contract Ranger Services	Ranger Services- 14/2/2025 & 18/2/2025	$470.25
EFT7728	07/03/2025	BGL Solutions	Rec Centre Oval Maintenance- February 2025	$3,798.78
EFT7729	07/03/2025	The Woody Shop	Refreshments for 2025 Australia Day Event & Council Meetings, Stamps and Groceries	$960.68
EFT7730	07/03/2025	CGS Tyres	Removed steel peg/object from 1 x 17.5r25 tyre- WO 007	$247.50
EFT7731	07/03/2025	APPS Plumbing and Gas Wagin	Replace leaking solar water heater with instant gas continous flow water, Remove solar water heater- 3347 Robinson Road	$2,546.50
EFT7732	07/03/2025	Darren Long Consulting	Prepare and Review Monthly Finanical Reports, Prepare and Review Budget Workpaper, Review and approve jounrals, Prepare Grants Commision Information Return- January 2025	$4,004.00
EFT7733	07/03/2025	Bishops Transport	Freight- Scavenger Supplies	$94.39
EFT7734	07/03/2025	Greenfields Technical Services	Site Inspections and meetings with Shire, Prepare & Issue RFQ'S- January 2025	$6,897.00
EFT7735	07/03/2025	JGM Handyman Services	Replace wheels & fix back security door, Fix shower rod to wall, Fix hallway roller door and attach pelmet- 3340 Robinson Road	$355.00
EFT7736	07/03/2025	Seton Australia	2 x Baby Change Table- Centenary Park, 5pks (Pack of 10) Ice Pops, 1 pk of 50x Qwik Sticks- Depot, 2 x Tobin Eyewash Cabinet	$2,728.58
EFT7737	07/03/2025	Woolworths Group Limited	Refreshments- Bushfire at West Arthur	$101.85
EFT7738	07/03/2025	ATO	BAS- January 2025	$13,122.00
EFT7739	07/03/2025	Great Southern Fuel Supplies	Statement- February 2025	$8,557.32
EFT7740	07/03/2025	PCS	Logged cashier into Adobe, Create DNS records, Enable DKIM as additional antispam measure, Monthly fee for Daily Monitoring- February 2025	$255.00
EFT7741	07/03/2025	Katanning Hardware	1 x Kings Gazebo 6m x 3m- 2025 Australia Day Event	$249.95
EFT7742	07/03/2025	Albany Best Office Systems	Photocopier Count- B/W 784 copies, Colour 1750 copies, 20/1/2025 to 20/2/2025	$318.89
EFT7743	07/03/2025	Great Southern Waste Disposal	Removal of household rubbish- 26/12/2024 to 30/1/2025, Removal of recycling rubbish- 19th & 23rd	$4,133.60
EFT7744	14/03/2025	West Australian Newspaper	Advertisement- Annual Electors Meeting in Great Southern Herald- Feb 2025	$165.28
EFT7745	14/03/2025	Dale Stuart Douglas	Bond Refund- Hire of Pavilion- December 2024	$400.00
EFT7746	14/03/2025	WA Contract Ranger Services	Ranger Services- 24/2/2025, 25/2/2025 & 6/3/2025	$627.00
EFT7747	14/03/2025	South West Fire Unit Fabrications	Supply 2 x PAC Brackets- WO 018	$325.56
EFT7748	14/03/2025	Hersey's Safety Pty Ltd	4 x 15kg bag of rags, Black Ink Markers, D Shackles, Brake Clean, Rigger Gloves, All purpose bags and Starter Cord- Depot	$1,455.84

SHIRE OF WOODANILLING
STATEMENT OF PAYMENTS
FOR THE PERIOD 31 MARCH 2025

EFT7749	14/03/2025	Hunter Mechanical Services Pty Ltd	Pearless air compressor & Repair Oil Leak, Repair fuel pum- WO 003, B Service- WO 022, Repalce blades- WO 021 including return travel from Kojonup	$2,308.70
EFT7750	14/03/2025	Nutrien Ag Solutions-Katanning	3 x 8.5kg Gas Bottle Exchange- Rec Centre	$122.10
EFT7751	14/03/2025	City of Kalamunda	Building Services- 29 May 2024 to 30 Janaury 2025	$305.20
EFT7752	14/03/2025	Smarter Control	Inspect 2 Woodanilling Standpipes including travel from Perth for Electrician- Boyerine & Townsite	$704.00
EFT7753	14/03/2025	Darren Long Consulting	Teams Meeting for Budget Review, Prepare Janaury Monthly Financial Report, Update Grants Commission Info Return, Review and approve jounrals, Prepare Road Project budget and actuals, Prepare WALGA Road Expenditure Info Return and supporting workpaper- February 2025	$2,931.50
EFT7754	14/03/2025	Bishops Transport	Freight- Stewart & Heaton	$46.17
EFT7755	14/03/2025	Solid Ceilings	Final payment- Repair kitchen ceiling- 13 Cardigan St	$2,345.88
EFT7756	14/03/2025	Intelife Group Ltd	2 x Operators, EWP, Chipper Truck & Mob, meals & accomodation- Robinson Road, Robinson Road East, Yarabin Road, Cardigan Street, Carlisle Street, Carlton Street & Monger Road	$28,503.75
EFT7757	14/03/2025	Ray Ford Signs	Supply, print and UV laminate 2 x Fire Acces Only" signs on SWP	$414.88
EFT7758	14/03/2025	FitzGerald Strategies	Assist Council with the recruitment and selection of new CEO- Jan/Feb 2025	$5,500.50
EFT7759	14/03/2025	BTW Rural Supplies	Purchase of 1 x S/P 48cm LC419SP Lawn Mower- Depot	$1,318.00
EFT7760	14/03/2025	DFES	2024/2025 ESL Quarter 3 Contribution	$11,896.50
EFT7761	14/03/2025	Katanning Hardware	Sprinkler Nozzle, End Hose Couplers, Pop Up Sprinklers- Unit 1 Wattleville	$155.45
EFT7762	14/03/2025	Kojonup Agricultural Supplies	2 x Stihl Champs Chainsaw XL- Depot	$398.00
EFT7763	14/03/2025	Great Southern Waste Disposal	Removal of household rubbish- 28/11/2024 to 26/12/2024, Removal of recycling rubbish- 12th & 26th December 2024	$3,645.60
EFT7764	14/03/2025	E Fire & Safety	Service Fire Equipment- Shire Depot, Office, Recreation Centre and Tip	$1,153.90
EFT Total Payments				**$122,786.99**

Cheque Payments

15401	14/03/2025	Department of Transport	Special Series Plate- 066 WO- Rebo Nominees	$200.00
Total Cheque Payments				**$200.00**

Direct Debit Payments

DD5994.1	14/03/2025	Water Corporation	Water Service Charge- 1/1/2025 to 28/2/2025, Usage- 10/12/2024 to 20/2/2025- Various Shire Properties	$6,051.19
DD5994.2	10/03/2025	Water Corporation	Water Service Charge- 1/1/2025 to 28/2/2025, Usage- 10/12/2024 to 20/2/2025- Various Shire Properties	$908.50
DD5994.3	18/03/2025	Water Corporation	Water Service Charge- 1/1/2025 to 28/2/2025, Usage- 10/12/2024 to 20/2/2025- Standpipes	$29,813.96
DD5995.1	18/03/2025	Synergy	Power Supply & Usage- 18/12/2024 to 20/2/2025- Various Shire Properties	$2,644.33
DD5995.2	20/03/2025	Synergy	Power Supply & Usage- 19/12/2024 to 20/2/2025- Various Shire Properties	$1,420.02

SHIRE OF WOODANILLING
STATEMENT OF PAYMENTS
FOR THE PERIOD 31 MARCH 2025

DD5995.3	19/03/2025	Synergy	Power Supply & Usage- 18/12/2024 to 20/2/2025- Various Shire Properties	$887.88
DD5996.1	14/03/2025	Water Corporation	Water Usage- 10/12/2024 to 20/2/2025, Service Charges- 1/1/2025 to 28/2/2025- Various Shire Properties	$155.77
DD5996.2	10/03/2025	Water Corporation	Water Usage- 10/12/2024 to 20/2/2025, Service Charges- 1/1/2025 to 28/2/2025- Various Shire Properties	$1,107.29
DD5997.1	21/03/2025	Synergy	Power Usage- 19/12/2024 to 20/2/2025- Mens Shed	$165.44
DD5997.2	15/03/2025	Connect Technology Australia	Landline Distribution- Mobile Access Fee 28/2/2025 to 27/3/2025, Other Charges 28/1/2025 to 27/2/2025	$367.95
DD5997.3	14/03/2025	Message4U Pty Ltd	SMS Messages Outbound- 1/2/2025 to 28/2/2025, Monthly Access Fee- 1/3/2025 to 31/3/2025	$96.65
DD5997.4	16/03/2025	Telstra Limited	Mobile Distribution- Call Charges up to 24/2/2025, Equipment Charges- 25/2/2025 to 24/3/2025, CEO, EMI, LH & TM-	$494.08
DD5998.1	06/03/2025	NAB - Credit Card	Statement- Mark Hook- February 2025	$148.00
DD5999.1	06/03/2025	NAB - Credit Card	Statement- Paul Hanlon- February 2025	$563.64
DD6001.1	05/03/2025	Aware Super	Payroll deductions	$693.92
DD6001.2	05/03/2025	Colonial Select Personnel Super	Superannuation contributions	$215.41
DD6001.3	05/03/2025	REST	Superannuation contributions	$285.28
DD6001.4	05/03/2025	TWU Superannuation Fund	Superannuation contributions	$134.04
DD6001.5	05/03/2025	Australian Super	Payroll deductions	$972.98
DD6001.6	05/03/2025	Spirit Super	Superannuation contributions	$113.82
DD6001.7	05/03/2025	AMP Limited	Superannuation contributions	$151.40
DD6001.8	05/03/2025	Prime Super	Superannuation contributions	$120.28
DD6011.1	24/03/2025	Synergy	Power Usage- 19/12/2024 to 20/2/2025- Salmon Gum Biomax	$345.29
DD6012.1	24/03/2025	ClickSuper	Transaction & Facilty Fee- February 2025	$19.03
DD6014.1	12/03/2025	Aware Super	Payroll deductions	$1,530.04
DD6014.2	12/03/2025	Colonial Select Personnel Super	Superannuation contributions	$193.18
DD6014.3	12/03/2025	REST	Superannuation contributions	$288.74
DD6014.4	12/03/2025	TWU Superannuation Fund	Superannuation contributions	$134.04
DD6014.5	12/03/2025	Australian Super	Payroll deductions	$972.98
DD6014.6	12/03/2025	Spirit Super	Superannuation contributions	$70.01
DD6014.7	12/03/2025	AMP Limited	Superannuation contributions	$165.40
DD6014.8	12/03/2025	Prime Super	Superannuation contributions	$114.57
DD6017.1	19/03/2025	Aware Super	Payroll deductions	$903.88
DD6017.2	19/03/2025	Colonial Select Personnel Super	Superannuation contributions	$193.18
DD6017.3	19/03/2025	REST	Superannuation contributions	$285.28
DD6017.4	19/03/2025	TWU Superannuation Fund	Superannuation contributions	$134.04
DD6017.5	19/03/2025	Australian Super	Payroll deductions	$972.98
DD6017.6	19/03/2025	Spirit Super	Superannuation contributions	$80.96
DD6017.7	19/03/2025	AMP Limited	Superannuation contributions	$95.39
DD6017.8	19/03/2025	Prime Super	Superannuation contributions	$118.38
DD6019.1	26/03/2025	Aware Super	Payroll deductions	$903.88
DD6019.2	26/03/2025	Colonial Select Personnel Super	Superannuation contributions	$193.18
DD6019.3	26/03/2025	REST	Superannuation contributions	$289.31
DD6019.4	26/03/2025	TWU Superannuation Fund	Superannuation contributions	$134.04
DD6019.5	26/03/2025	Australian Super	Payroll deductions	$972.98
DD6019.6	26/03/2025	Spirit Super	Superannuation contributions	$148.51
DD6019.7	26/03/2025	Prime Super	Superannuation contributions	$118.38
DD6022.1	15/03/2025	3E Advantage Pty Limited	Ricoh IMC3500 MFP Photocopier Rental- March 2025	$165.00
DD6022.2	31/03/2025	Telstra Limited	White Pages Listing- 2025 WA South Western Directory	$19.53
Total Direct Debit Payments				**$57,074.01**

Attachment 13.1.1

SHIRE OF WOODANILLING
STATEMENT OF PAYMENTS
FOR THE PERIOD 31 MARCH 2025

Municipal Account List of Payments Total **$180,061.00**

Credit Card Details - DD5998.1

	Name	Description	
27/02/2025	Starlink	Subscription- 25/2/2025 to 25/3/2025- 3327 Robinson Road	$139.00
28/02/2025	NAB Credit Card	Card Fee- February 2025	$9.00
		Credit Card TOTAL on DD5998.1	**$148.00**

Credit Card Details - DD5999.1

	Name	Description	
07/02/2025	Woolworths	Refreshments- Town Teams Meeting	$50.00
07/02/2025	Adobe	Subscription- 31/1/2025 to 27/2/2025	$244.94
07/02/2025	Katanning Betta Home Living	HDMI Cords- Shire Office	$129.70
17/02/2025	Starlink	Subscription- 16/2/2025 to 16/3/2025- Shire Office, Depot & Chambers	$139.00
		Credit Card TOTAL on DD5999.1	**$563.64**

Great Southern Fuel Supplies- EFT7739

12/12/2025	Great Southern Fuel- Inv D2206880 (Raised on Purchase Order)	Bulk Fuel Diesel- 4500 litres @ $1.58831 per litre (ex GST)	$7,862.14
12/02/2025	Invoice 17009797 (Raised on Purchase Order)	12 x 450g Spheerol EPLX grease	$130.00
24/02/2025	Invoice 17009815 (Raised on Purchase Order)	1 x 20L Chainsaw Oil	$126.95
28/02/2025	Fuel Card Purchases	Fuel Card- WO 0 & WO 00	$438.23
		Great Southern Fuel Supplies TOTAL on EFT7739	**$8,557.32**

CERTIFICATE OF Chief Executive Officer

This schedule of accounts to be passed for payment, covering vouchers as above which was submitted to each member of Council has been checked and is fully supported by vouchers and invoices which are submitted herewith and which have been duly certified as to the receipt of goods and the rendition of services and as to the prices, computations, and costings and the amounts shown are due for payment.

Signed by

_____

Mark Hook
Chief Executive Officer

SHIRE OF WOODANILLING
STATEMENT OF PAYMENTS
FOR THE PERIOD 31 MARCH 2025

Attachment 13.1.1

SHIRE OF WOODANILLING

MONTHLY FINANCIAL REPORT

31 MARCH 2025

TABLE OF CONTENTS

	Page
Basis of Preparation	2
Key Terms and Descriptions - Reporting Function/Programs	3
Statement of Comprehensive Income by Program	4
Key Terms and Descriptions - Nature & Type	5
Statement of Comprehensive Income by Nature & Type	6
Statement of Financial Activity by Nature & Type	7
Statement of Financial Activity by Program	8
Net Current Position	9
Variance Report	10-12
Statement of Financial Position	13
Statement of CashFlows	14-15
Capital Expenditure Program	16
Statement of Capital Grants and Contract Liabilities	17
Reserve Accounts	18
Detailed Operating & Non-Operating Accounts	19-49

SHIRE OF WOODANILLING
MONTHLY FINANCIAL REPORT
FOR THE PERIOD ENDED 31 MARCH 2025

PREPARATION TIMING AND REVIEW

Date prepared: All known transactions up to 31 MARCH 2025

Prepared by: Darren Long (Finance Consultant)
Reviewed by: Mark Hook (Acting CEO)

BASIS OF PREPARATION

REPORT PURPOSE

This report is prepared to meet the requirements of Local Government (Financial Management) Regulations 1996, Regulation 34 . Note: The Statements and accompanying notes are prepared based on all transactions recorded at the time of preparation and may vary due to transactions being processed for the reporting period after the date of preparation.

BASIS OF ACCOUNTING

This statement comprises a special purpose financial report which has been prepared in accordance with Australian Accounting Standards (as they apply to local governments and not-for-profit entities), Australian Accounting Interpretations, other authoritative pronouncements of the Australian Accounting Standards Board, the Local Government Act 1995 and accompanying regulations. Material accounting policies which have been adopted in the preparation of this statement are presented below and have been consistently applied unless stated otherwise. Except for cash flow and rate setting information, the report has also been prepared on the accrual basis and is based on historical costs, modified, where applicable, by the measurement at fair value of selected non-current assets, financial assets and liabilities.

THE LOCAL GOVERNMENT REPORTING ENTITY

All Funds through which the Council controls resources to carry on its functions have been included in this statement. In the process of reporting on the local government as a single unit, all transactions and balances between those funds (for example, loans and transfers between Funds) have been eliminated. All monies held in the Trust Fund are excluded from the statement. The Shire currently holds no monies in its Trust Fund.

SIGNIFICANT ACCOUNTING POLICES

GOODS AND SERVICES TAX

Revenues, expenses and assets are recognised net of the amount of GST, except where the amount of GST incurred is not recoverable from the Australian Taxation Office (ATO). Receivables and payables are stated inclusive of GST receivable or payable. The net amount of GST recoverable from, or payable to, the ATO is included with receivables or payables in the statement of financial position. Cash flows are presented on a gross basis. The GST components of cash flows arising from investing or financing activities which are recoverable from, or payable to, the ATO are presented as operating cash flows.

CRITICAL ACCOUNTING ESTIMATES

The preparation of a financial report in conformity with Australian Accounting Standards requires management to make judgements, estimates and assumptions that effect the application of policies and reported amounts of assets and liabilities, income and expenses. The estimates and associated assumptions are based on historical experience and various other factors that are believed to be reasonable under the circumstances; the results of which form the basis of making the judgements about carrying values of assets and liabilities that are not readily apparent from other sources. Actual results may differ from these estimates.

ROUNDING OFF FIGURES

All figures shown in this statement are rounded to the nearest dollar.

SHIRE OF WOODANILLING
MONTHLY FINANCIAL REPORT
FOR THE PERIOD ENDED 31 MARCH 2025

STATUTORY REPORTING PROGRAMS

The local governments operations as disclosed in these financial statements encompass the following service orientated activities/programs.

	ACTIVITIES
GOVERNANCE	
To provide a decision making process for the efficient allocation of scarce resources.	Administration and operation of facilities and services to members of the Council. Other costs that relate to the tasks of assisting elected members and ratepayers on matters which are which are not directly related to specific shire services.
GENERAL PURPOSE FUNDING	
To collect revenue to allow for the provision of services.	Rates, general purpose government grants and interest revenue.
LAW, ORDER, PUBLIC SAFETY	
To provide services to help ensure a safer community.	Supervision of various by-laws, fire prevention, emergency services and animal control.
HEALTH	
To provide an operational framework for good community health.	Food and water quality, pest control, immunisation services, child health services and health education.
EDUCATION AND WELFARE	
To meet the needs of the community in these areas.	Management and support for families, children, youth and the aged within the community by providing Youth, Aged and Family Centres, Home and Community Aged Care Programs and assistance to schools.
HOUSING	
To help ensure adequate housing.	Provision of residential housing for council staff. Provision of housing for aged persons, low income families, government and semi government employees.
COMMUNITY AMENITIES	
Provide services required by the community.	Rubbish collection services and disposal of waste, stormwater drainage, protection of the environment, town planning and regional development and other community amenities (cemeteries and public toilets).
RECREATION AND CULTURE	
To establish and manage efficiently infrastructure and resources which will help the social wellbeing of the community.	Public halls, recreation and aquatic centres, parks and reserves, libraries, heritage and culture.
TRANSPORT	
To provide effective and efficient transport services to the community.	Construction and maintenance of roads, footpaths, bridges, street cleaning and lighting, road verges, streetscaping and depot maintenance.
ECONOMIC SERVICES	
To help promote the Shire and its economic wellbeing.	The regulation and provision of tourism, area promotion, building control, noxious weeds, vermin control and standpipes.
OTHER PROPERTY AND SERVICES	
To monitor and control Shire's overhead operating accounts.	Private works, public works overheads, plant and equipment operations, town planning schemes and activities not reported in the above programs.

Attachment 13.2.1

SHIRE OF WOODANILLING
MONTHLY FINANCIAL REPORT
STATEMENT OF COMPREHENSIVE INCOME BY PROGRAM
FOR THE PERIOD ENDING 31 MARCH 2025

	2024-2025 ANNUAL BUDGET	2024-2025 AMENDED BUDGET	2024-2025 YTD BUDGET	2024-2025 YTD ACTUAL
EXPENDITURE (Exluding Finance Costs)	**$**	**$**		**$**
General Purpose Funding	(53,582)	(54,982)	(25,395)	(24,466)
Governance	(286,976)	(312,412)	(198,240)	(240,859)
Law, Order, Public Safety	(185,098)	(156,399)	(136,271)	(108,021)
Health	(58,513)	(59,570)	(40,676)	(31,362)
Education and Welfare	(93,356)	(93,955)	(67,530)	(28,938)
Housing	(76,161)	(80,217)	(57,048)	(54,774)
Community Amenities	(275,083)	(294,135)	(196,129)	(179,380)
Recreation and Culture	(315,715)	(336,622)	(220,924)	(141,747)
Transport	(2,916,034)	(2,812,627)	(1,970,276)	(920,204)
Economic Services	(98,860)	(101,951)	(70,190)	(87,816)
Other Property and Services	(2,672)	(504)	(6,412)	124,963
Operating Expenses	(4,362,050)	(4,303,374)	(2,989,091)	(1,692,605)
REVENUE				
General Purpose Funding	1,152,485	1,231,034	1,122,778	1,188,741
Governance	25,050	9,950	17,532	8,003
Law, Order, Public Safety	98,929	43,908	51,639	32,090
Health	430	430	430	318
Education and Welfare	108,589	102,089	87,840	53,477
Housing	12,980	14,380	8,648	13,833
Community Amenities	69,654	72,984	65,807	70,591
Recreation and Culture	2,925	4,425	2,795	3,614
Transport	199,630	222,057	165,106	217,901
Economic Services	36,050	35,610	5,640	81,084
Other Property & Services	18,375	28,456	12,689	28,763
Operating Revenue	1,725,097	1,765,323	1,540,904	1,698,413
Sub-Total	(2,636,953)	(2,538,051)	(1,448,187)	5,808
NON-OPERATING REVENUE				
General Purpose Funding	531,685	368,194	0	100,591
Community Amenities	40,014	40,014	0	0
Transport	1,148,663	1,148,663	1,000,292	545,060
Total Non-Operating Revenue	1,720,362	1,556,871	1,000,292	645,651
PROFIT/(LOSS) ON SALE OF ASSETS				
Governance Profit	0	0	0	0
Governance Loss	0	0	0	0
Total Profit/(Loss)	0	0		0
NET RESULT	(916,591)	(981,180)	(447,895)	651,459
Other Comprehensive Income				
Changes on revaluation of non-current assets	0	0		0
Total Other Comprehensive Income	0	0	0	0
TOTAL COMPREHENSIVE INCOME	**(916,591)**	**(981,180)**	**(447,895)**	**651,459**

SHIRE OF WOODANILLING
MONTHLY FINANCIAL REPORT
FOR THE PERIOD ENDED 31 MARCH 2025

NATURE OR TYPE DESCRIPTIONS

REVENUE

RATES
All rates levied under the Local Government Act 1995. Includes general, differential, specific area rates, minimum rates, interim rates, back rates, ex-gratia rates, less discounts offered. Exclude administration fees, interest on instalments, interest on arrears and service charges.

GRANTS, SUBSIDIES AND CONTRIBUTIONS
Refer to all amounts received as grants, subsidies and contributions that are not non-operating grants.

CAPITAL GRANTS, SUBSIDIES AND CONTRIBUTIONS
Amounts received specifically for the acquisition, construction of new or the upgrading of non-current assets paid to a local government, irrespective of whether these amounts are received as capital grants, subsidies, contributions or donations.

PROFIT ON ASSET DISPOSAL
Profit on the disposal of assets including gains on the disposal of long term investments. Losses are disclosed under the expenditure classifications.

FEES AND CHARGEES
Revenues (other than service charges) from the use of facilities and charges made for local government services, sewerage rates, rentals, hire charges, fee for service, photocopying charges, licences, sale of goods or information, fines, penalties and administration fees. Local governments may wish to disclose more detail such as rubbish collection fees, rental of property, fines and penalties, other fees and charges.

SERVICE CHARGES
Service charges imposed under Division 6 of Part 6 of the Local Government Act 1995. Regulation 54 of the Local Government (Financial Management) Regulations 1996 identifies these as television and radio broadcasting, underground electricity and neighbourhood surveillance services. Exclude rubbish removal charges. Interest and other items of a similar nature received from bank and investment accounts, interest on rate instalments, interest on rate arrears and interest on debtors.

INTEREST REVENUE
Interest and other items of a similar nature received from bank and investment accounts, interest on rate instalments, interest on rate arrears and interest on debtors.

OTHER REVENUE / INCOME
Other revenue, which can not be classified under the above headings, includes dividends, discounts, rebates etc.

EXPENSES

EMPLOYEE COSTS
All costs associate with the employment of person such as salaries, wages, allowances, benefits such as vehicle and housing, superannuation, employment expenses, removal expenses, relocation expenses, worker's compensation insurance, training costs, conferences, safety expenses, medical examinations, fringe benefit tax, etc.

MATERIALS AND CONTRACTS
All expenditures on materials, supplies and contracts not classified under other headings. These include supply of goods and materials, legal expenses, consultancy, maintenance agreements, communication expenses, advertising expenses, membership, periodicals, publications, hire expenses, rental, leases, postage and freight etc. Local governments may wish to disclose more detail such as contract services, consultancy, information technology, rental or lease expenditures.

UTILITIES (GAS, ELECTRICITY, WATER, ETC.)
Expenditures made to the respective agencies for the provision of power, gas or water. Exclude expenditures incurred for the reinstatement of roadwork on behalf of these agencies.

INSURANCE
All insurance other than worker's compensation and health benefit insurance included as a cost of employment.

LOSS ON ASSET DISPOSAL
Loss on the disposal of fixed assets.

DEPRECIATION
Depreciation expense raised on all classes of assets.

FINANCE COSTS
Interest and other costs of finance paid, including costs of finance for loan debentures, overdraft accommodation and refinancing expenses.

OTHER EXPENDITURE
Statutory fees, taxes, provision for bad debts, member's fees or State taxes. Donations and subsidies made to community groups.

SHIRE OF WOODANILLING
MONTHLY FINANCIAL REPORT
STATEMENT OF COMPREHENSIVE INCOME BY NATURE & TYPE
FOR THE PERIOD ENDING 31 MARCH 2025

	2024-2025 ORIGINAL BUDGET	2024-2025 AMENDED BUDGET	2024-2025 YTD BUDGET	2024-2025 YTD ACTUAL
Expenses				
Employee Costs	(1,264,215)	(1,208,008)	(855,404)	(805,736)
Materials and Contracts	(833,539)	(813,214)	(582,193)	(498,362)
Utility Charges	(100,700)	(124,614)	(68,512)	(100,426)
Depreciation on Non-Current Assets	(1,819,595)	(1,819,595)	(1,212,851)	0
Interest Expenses	0	0	0	0
Insurance Expenses	(123,786)	(116,532)	(123,808)	(115,985)
Other Expenditure	(220,215)	(221,411)	(146,323)	(172,097)
Operating Expenses	(4,362,050)	(4,303,374)	(2,989,091)	(1,692,605)
Revenue				
Rates	1,103,601	1,098,626	1,095,601	1,096,994
Operating Grants, Subsidies and Contributions	338,747	373,147	262,919	288,539
Fees and Charges	253,499	260,052	165,030	291,921
Service Charges	0	0	0	0
Interest Earnings	25,800	25,883	15,050	16,576
Other Revenue	3,450	7,615	2,304	4,383
Operating Revenue	1,725,097	1,765,323	1,540,904	1,698,413
Sub-total	(2,636,953)	(2,538,051)	(1,448,187)	5,808
Non-Operating Grants, Subsidies & Contributions	1,720,362	1,556,871	1,000,292	645,651
Profit on Asset Disposals	0	0	0	0
Loss on Asset Disposals	0	0	0	0
Non-Operating Revenue	1,720,362	1,556,871	1,000,292	645,651
Net Result	**(916,591)**	**(981,180)**	**(447,895)**	**651,459**
Other Comprehensive Income				
Changes on revaluation of non-current assets	0	0	0	0
Total Other Comprehensive Income	0	0	0	0
TOTAL COMPREHENSIVE INCOME	**(916,591)**	**(981,180)**	**(447,895)**	**651,459**

SHIRE OF WOODANILLING
MONTHLY FINANCIAL REPORT
STATEMENT OF FINANCIAL ACTIVITY BY NATURE/TYPE
FOR THE PERIOD ENDING 31 MARCH 2025

	2024-2025 ORIGINAL BUDGET	2024-2025 AMENDED BUDGET	2024-2025 YTD BUDGET (a)	2024-2025 YTD ACTUAL (b)	VARIANCE $ (b)-(a)	VARIANCE % (b)-(a)/(a)	Var ▲▼
OPERATING REVENUE	**$**		**$**	**$**			
Rates other than General Rates	(23,648)	(28,624)	(31,648)	(30,257)	Within Threshold	Within Threshold	
Operating Grants, Subsidies and Contributions	338,747	373,147	266,855	288,539	21,684	Within Threshold	
Fees and Charges	253,499	260,052	179,213	291,921	112,708	62.89%	▲
Interest Earnings	25,800	25,883	17,450	16,577	Within Threshold	Within Threshold	
Other Revenue	3,450	7,615	2,592	4,384	Within Threshold	69.14%	
Profit on the disposal of assets	0		0	0	Within Threshold	0%	
	597,848	**638,073**	**434,462**	**571,164**			
LESS OPERATING EXPENDITURE							
Employee Costs	(1,264,215)	(1,208,008)	(950,906)	(805,736)	145,170	(15.27%)	
Materials and Contracts	(833,539)	(813,214)	(653,442)	(498,362)	155,080	(23.73%)	
Utility Charges	(100,700)	(124,614)	(73,041)	(100,426)	(27,385)	37.49%	
Depreciation on Non-Current Assets	(1,819,595)	(1,819,595)	(1,364,422)	0	1,364,422	100.00%	
Interest Expenses	0	0	0	0	Within Threshold	0%	
Insurance Expenses	(123,786)	(116,532)	(123,808)	(115,985)	7,823	Within Threshold	
Other Expenditure	(220,215)	(221,411)	(155,549)	(172,097)	(16,548)	10.64%	
Loss on the disposal of assets	0		0	0	Within Threshold	0.00%	
	(4,362,050)	**(4,303,374)**	**(3,321,168)**	**(1,692,606)**			
Amount Attributable to Operating Activities	**(3,764,202)**	**(3,665,301)**	**(2,886,706)**	**(1,121,442)**			
ITEMS EXCLUDED FROM OPERATING ACTIVITIES							
Profit/ on the disposal of assets	0	0	0	0	0	0%	
(Loss) on the disposal of assets	0		0	0	0	0%	
Depreciation Written Back	1,819,595	1,819,595	1,364,422	0	(1,364,422)	(100.00%)	▼
	1,819,595	**1,819,595**	**1,364,422**	**0**			
Sub Total	**(1,944,607)**	**(1,845,706)**	**(1,522,284)**	**(1,121,442)**			
INVESTING ACTIVITIES							
Outflows from investing activities							
Purchase Buildings	(5,000)	(25,000)	(5,000)	0	Within Threshold	100.00%	
Purchase Plant and Equipment	(12,000)	(12,000)	(12,000)	(2,180)	9,820	81.83%	
Purchase Furniture and Equipment	(33,700)	(30,335)	(33,700)	(30,336)	Within Threshold	Within Threshold	
Infrastructure Assets - Roads	(1,785,677)	(1,839,151)	(1,714,176)	(747,511)	966,665	56.39%	
Infrastructure Assets - Drainage	(66,345)	(66,345)	(21,894)	(27,377)	(5,483)	(25.04%)	
Infrastructure Assets - Other	(105,000)	(105,000)	(105,000)	(16,818)	88,182	83.98%	
Inflows from investing activities							
Proceeds from Sale of Assets	8,900	7,957	8,900	62,657	53,757	604.01%	▲
Non-Operating Grants, Subsidies & Contributions	1,720,362	1,556,871	1,000,292	645,651	(354,641)	(35.45%)	▼
Amount Attributable to Investing Activities	**(278,460)**	**(513,003)**	**(882,578)**	**(115,914)**			
FINANCING ACTIVITIES							
Outflows from financing activities							
Transfer to Reserves	(239,563)	(246,263)	(7,497)	(10,633)	Within Threshold	(41.83%)	
Inflows from financing activities							
Transfer from Reserves	105,481	125,481	0	0	0	0%	
Amount Attributable to Financing Activities	**(134,082)**	**(120,782)**	**(7,497)**	**(10,633)**			
Sub Total	**(2,357,149)**	**(2,479,491)**	**(2,412,359)**	**(1,247,989)**			
FUNDING FROM							
Estimated Opening Surplus at 1 July	1,229,900	1,354,241	1,229,900	1,354,241	124,341	10.11%	▲
Closing Surplus/(Deficit) at Reporting Date	0	2,000	(55,210)	1,233,502			
Total Deficiency to be funded from Rates	**(1,127,249)**	**(1,127,250)**	**(1,127,249)**	**(1,127,250)**			
AMOUNT RAISED FROM RATES	**1,127,249**	**1,127,250**	**1,127,249**	**1,127,250**			

SHIRE OF WOODANILLING
MONTHLY FINANCIAL REPORT
STATEMENT OF FINANCIAL ACTIVITY BY FUNCTION/PROGRAM
FOR THE PERIOD ENDING 31 MARCH 2025

	2024-2025 ORIGINAL BUDGET	2024-2025 AMENDED BUDGET	2024-2025 YTD BUDGET (a)	2024-2025 YTD ACTUAL (b)	VARIANCE $ (b)-(a)	VARIANCE % (b)-(a)/(a)	VAR ▲▼
OPERATING REVENUE	**$**		**$**	**$**			
General Purpose Funding	25,236	103,784	(1,961)	61,491	63,452	3235%	
Governance	25,050	9,950	17,536	8,003	(9,533)	(54%)	▼
Law, Order Public Safety	98,929	43,908	51,639	32,090	(19,549)	(38%)	▼
Health	430	430	430	318	Within Threshold	26%	
Education and Welfare	108,589	102,089	94,370	53,477	(40,893)	(43%)	▼
Housing	12,980	14,380	9,729	13,833	Within Threshold	42%	
Community Amenities	69,654	72,984	66,431	70,591	Within Threshold	Within Threshold	
Recreation and Culture	2,925	4,425	2,795	3,614	Within Threshold	(29%)	
Transport	199,630	222,057	173,728	217,901	44,173	25%	▲
Economic Services	36,050	35,610	5,660	81,083	75,423	1333%	▲
Other Property and Services	18,375	28,456	14,105	28,763	14,658	(104%)	▲
	597,848	**638,073**	**434,462**	**571,164**			
LESS OPERATING EXPENDITURE							
General Purpose Funding	(53,582)	(54,982)	(28,429)	(24,466)	Within Threshold	14%	
Governance	(286,976)	(312,412)	(220,503)	(240,860)	(20,357)	Within Threshold	
Law, Order, Public Safety	(185,098)	(156,399)	(147,905)	(108,021)	39,884	27%	
Health	(58,513)	(59,570)	(45,132)	(31,363)	13,769	31%	
Education and Welfare	(93,356)	(93,955)	(74,390)	(28,938)	45,452	61%	
Housing	(76,161)	(80,217)	(61,772)	(54,774)	6,998	11%	
Community Amenities	(275,083)	(294,135)	(216,055)	(179,380)	36,675	17%	
Recreation and Culture	(315,715)	(336,622)	(245,372)	(141,747)	103,625	42%	
Transport	(2,916,034)	(2,812,627)	(2,205,889)	(920,204)	1,285,685	58%	
Economic Services	(98,860)	(101,951)	(77,334)	(87,816)	(10,482)	(14%)	
Other Property & Services	(2,672)	(504)	1,613	124,963	123,350	(7647%)	▲
	(4,362,050)	**(4,303,374)**	**(3,321,168)**	**(1,692,606)**			
Amount Attributable to Operating Activities	**(3,764,202)**	**(3,665,301)**	**(2,886,706)**	**(1,121,442)**			
ITEMS EXCLUDED FROM OPERATING ACTIVITIES							
Movement in LG House Unit Trust	0		0	0	0	0%	
Profit/(Loss) on the disposal of assets	0	0	0	0	0	0%	
Depreciation Written Back	1,819,595	1,819,595	1,364,422	0	(1,364,422)	(100.00%)	▼
Total Items Excluded from Operating Activities	**1,819,595**	**1,819,595**	**1,364,422**	**0**			
Net Amount Attributable to Operating Activities	**(1,944,607)**	**(1,845,706)**	**(1,522,284)**	**(1,121,442)**			
INVESTING ACTIVITIES							
Outflows from investing activities							
Purchase Buildings	(5,000)	(25,000)	(5,000)	0	Within Threshold	100%	
Purchase Plant and Equipment	(12,000)	(12,000)	(12,000)	(2,180)	9,820	82%	
Purchase Furniture and Equipment	(33,700)	(30,335)	(33,700)	(30,336)	Within Threshold	Within Threshold	
Infrastructure Assets - Roads	(1,785,677)	(1,839,151)	(1,714,176)	(747,511)	966,665	56%	
Infrastructure Assets - Footpaths	0	0	0	0	Within Threshold	0%	
Infrastructure Assets - Drainage	(66,345)	(66,345)	(21,894)	(27,377)	(5,483)	(25%)	
Infrastructure Assets - Other	(105,000)	(105,000)	(105,000)	(16,818)	88,182	84%	
Inflows from investing activities							
Proceeds from Sale of Assets	8,900	7,957	8,900	62,657	53,757	(604%)	▲
Non-Operating Grants, Subsidies & Contributions	1,720,362	1,556,871	1,000,292	645,651	(354,641)	(35%)	▼
Amount Attributable to Investing Activities	**(278,460)**	**(513,003)**	**(882,578)**	**(115,914)**			
FINANCING ACTIVITIES							
Outflows from financing activities							
Transfer to Reserves	(239,563)	(246,263)	(7,497)	(10,633)	Within Threshold	(42%)	
Inflows from financing activities							
Transfer from Reserves	105,481	125,481	0	0	0	0%	
Amount Attributable to Financing Activities	**(134,082)**	**(120,782)**	**(7,497)**	**(10,633)**			
Sub Total	**(2,357,149)**	**(2,479,491)**	**(2,412,359)**	**(1,247,989)**			
FUNDING FROM							
Estimated Opening Surplus at 1 July	1,229,900	1,354,241	1,229,900	1,354,241	124,341	10.11%	▲
Closing Surplus/(Deficit) at Reporting Date	0	2,000	(55,210)	1,233,502			
Total Deficiency to be funded from Rates	**(1,127,249)**	**(1,127,250)**	**(1,127,249)**	**(1,127,250)**			
AMOUNT RAISED FROM RATES	**1,127,249**	**1,127,250**	**1,127,249**	**1,127,250**			

SHIRE OF WOODANILLING
MONTHLY FINANCIAL REPORT
SUMMARY OF CURRENT ASSETS AND LIABILITIES
FOR THE PERIOD ENDING 31 MARCH 2025

	ACTUAL YTD	30/06/2024
Current Assets		
Cash at bank and on Hand	1,680,843	2,154,059
Restricted Cash - Bonds & Deposits	-5,000	5,000
Restricted Cash Reserves	1,035,395	1,024,762
Trade Receivables	139,159	162,282
Contract Assets	164,752	188,102
Self Supporting Loan	0	0
Stock on Hand	15,438	7,831
Total Current Assets	**3,030,588**	**3,542,035**
Current Liabilities		
Trade Creditors	(134,469)	(404,090)
Rates paid in advance	0	0
Bonds and Deposits	(8,732)	(13,822)
Accrued Interest on Loans	0	0
Accrued Expense	0	0
ATO Liabilities	(17,767)	(22,462)
Contract Liability	(566,244)	(688,180)
Loan Liability	0	0
Provisions	(71,628)	(71,628)
Total Current Liabilities	**(798,840)**	**(1,200,182)**
Sub-Total	**2,231,747**	**2,341,853**
Adjustments		
LESS Cash Backed Reserves	(1,035,395)	(1,024,762)
LESS Self Supporting Loan	0	0
ADD: Current Loan Liability	0	0
ADD: LS Leave provision	37,149	37,149
Rounding	0	1
Net Current Position	**1,233,502**	**1,354,241**

SHIRE OF WOODANILLING
MONTHLY FINANCIAL REPORT
FOR THE PERIOD ENDING 31 MARCH 2025

EXPLANATION OF MATERIAL VARIANCES

The Local Government (Financial Management) Regulation 34 (2) (b) requires 'an explanation of each of the material variances' identified within the Statement of Financial Activity for each months financial statements. Any material variances on the Statement of Financial Activity are be reported below.

The Local Government (Financial Management) Regulation 34 (5) states that "Each financial year, a local government is to adopt a percentage or value, calculated in accordance with AAS5, to be used in statements of financial activity for reporting material variances.

For the Shire of Woodanilling, material variances are to be reported when exceeding 10%, and a minimum of $5,000.

REPORTING AREA	YTD BUDGET	YTD ACTUAL	VARIANCE $	VARIANCE %	TIMING / PERMANENT	EXPLANATION
Operating Revenue						
Operating Grants & Contributions	266,855	288,539	21,684	Within Threshold	TIMING	Increase in Grants Commission Grant - General by $ 47k, Increase in Grants Commission Grant - Roads by $ 15k, Decrease in Members - Operating Grants And Subsidies by $ 8k, Decrease in Income relating To MAF project by $ 33k, Increase in LGGS - Bushfire Grants Income by $ 6k, Decrease in Income relating to Well Aged Housing by $ 43k, Increase in Direct Maintenance Grant Income by $ 22k, Increase in Workers Compensation Reimbursements Income by $ 16k.
Fees & Charges	179,213	291,921	112,708	63%	TIMING	Increase in Income Relating to Transport Cleaning by $ 5k, Increase in Transport Licensing Clearing ACC by $ 19k, Increase in Income Relating To Standpipes by $ 76k,
Interest Earnings	17,450	16,577	Within Threshold	Within Threshold	PERMANENT	
Operating Expenses						
Employee Costs	(950,906)	(805,736)	145,170	-15%	TIMING	Increase in Expenses Relating To Administration by $ 27k, Decrease in Expenses Related To Administration by $ 88k, Increase in Fringe Benefits Tax by $ 8k, Increase in Tip Maintenance Costs by $ 11k, Decrease in Maintenance - Direct Grants by $ 8k, Decrease in Maintenance - Muni Fund Roads by $ 41k, Increase in Expenses Relating to the Shire Depot by $ 58k, Decrease in Public Works Supervisor Salaries by $ 55k, Decrease In Public Works Superannuation by $ 16k, Decrease in Public Holidays , Annual & long Service Leave by $ 21k, Decrease in Works Crew Staff Training by $ 7k, Decrease in Gross Salaries & Wages by $ 117k, Decrease in Less Salaries & Wages Allocated to Works by $ 124k.

SHIRE OF WOODANILLING
MONTHLY FINANCIAL REPORT
FOR THE PERIOD ENDING 31 MARCH 2025

EXPLANATION OF MATERIAL VARIANCES

The Local Government (Financial Management) Regulation 34 (2) (b) requires 'an explanation of each of the material variances' identified within the Statement of Financial Activity for each months financial statements. Any material variances on the Statement of Financial Activity are be reported below.

The Local Government (Financial Management) Regulation 34 (5) states that "Each financial year, a local government is to adopt a percentage or value, calculated in accordance with AAS5, to be used in statements of financial activity for reporting material variances.

For the Shire of Woodanilling, material variances are to be reported when exceeding 10%, and a minimum of $5,000.

REPORTING AREA	YTD BUDGET	YTD ACTUAL	VARIANCE $	VARIANCE %	TIMING / PERMANENT	EXPLANATION
Materials & Contracts	(653,442)	(498,362)	155,080	-24%	TIMING	Decrease in Councillor Training by $ 6k, Decrease in Integrated Planning & other Consultants by $ 6k, Decrease in expenses Relating to 4WDL VROC by $ 5k, Decrease in Consulting & Relief Staff by $ 24k, Increase in Computer Equipment Maintenance by $ 7k, Decrease in Expenses Relating To fire Prevention by $ 22k, Increase in Expenses Relating to LGGS BFB by $ 8k, Decrease in Expenses Relating To Well Aged Housing by $ 17k, Decrease in Maintenance 3327 Robinson Road by $ 7k, Decrease in Tip Maintenance Costs by $ 12k, Decrease in Expenses Relating To Town Planning by $ 13k, Decrease in Council Contribution to WWLZ by $ 16k, Decrease in Maintenance - Oval & Buildings by $ 14k, Decrease in Maintenance - Muni Fund Roads by $ 46k, Increase in Expenses Relating to the Shire Depot by $ 7k, Decrease in Maintenance Footpaths by $ 5k, Decrease in Maintenance - Bridges by $ 5k, Decrease in Expenses Relating to Building Control by $ 7k, Decrease in Protective Clothing & Safety by $ 5k, Decrease in Works Crew Staff Training by $7k, Decrease in Fuel & Oils by $ 39k, Decrease in Tyres by $ 10k, Decrease in Parts & Repairs by $ 22k, Decrease in Blades & Tynes by $ 7k, Decrease in Minor Equipment Purchases by $ 5k, Increase in Plant Operation Costs Allocated to Works by $ 125k, Increase in Plant Depreciation Costs Allocated to Works by $ 26k
Utility Charges	(73,041)	(100,426)	(27,385)	37%	TIMING	Increase in Expenses Relating to Standpipes by $ 25k
Depreciation on Assets	(1,364,422)	0	1,364,422	100%	TIMING	Depreciation not yet raised.
Insurance Expenses	(123,808)	(115,985)	7,823	Within Threshold	TIMING	It is Included Some minor Differences

SHIRE OF WOODANILLING
MONTHLY FINANCIAL REPORT
FOR THE PERIOD ENDING 31 MARCH 2025

EXPLANATION OF MATERIAL VARIANCES

The Local Government (Financial Management) Regulation 34 (2) (b) requires 'an explanation of each of the material variances' identified within the Statement of Financial Activity for each months financial statements. Any material variances on the Statement of Financial Activity are be reported below.

The Local Government (Financial Management) Regulation 34 (5) states that "Each financial year, a local government is to adopt a percentage or value, calculated in accordance with AAS5, to be used in statements of financial activity for reporting material variances.

For the Shire of Woodanilling, material variances are to be reported when exceeding 10%, and a minimum of $5,000.

REPORTING AREA	YTD BUDGET	YTD ACTUAL	VARIANCE $	VARIANCE %	TIMING / PERMANENT	EXPLANATION
Investing Activities						
Purchase Plant and Equipment	(12,000)	(2,180)	9,820	82%	TIMING	Decease in LRC319 Purchase Plant & Equipment by $ 10k
Infrastructure Assets - Roads	-1714176	-747511	966665	56%	TIMING	Decrease in Robinson Rd West project by $432k, Decrease in RRG-Oxley Road project by $298k, Decrease in RTR/LRCI4-Burt Road by $ 80k, Decrease in RTR- Oxley Road (Shoulder Rehab) by $ 25k, Decrease in RTR-Young Road (perform & Resheet) by $ 7k, Decrease in RTR-Gorn Road by $ 12k, Decrease in Robinson West Road (Shoulder Rehab) by $ 35k, Decrease in Orchard Road Floodway by $ 42k, Decrease in CRF - Leggoe Road Construction by $ 24k, Decrease in LRCI4B -Dinwoodie Road by $ 23k, Decrease in LRCI4B-Sandplain Floodway by $ 39k, Increase in LRCI4B- Douglas Road by $ 45k,
Infrastructure Assets - Drainage	(21,894)	(27,377)	(5,483)	-25%	TIMING	Increase in DWER Dam project expenses by $5k
Infrastructure Assets - Other	(105,000)	(16,818)	88,182	84%	TIMING	Decrease in Townsite Playground Project Expenses by $88k.
Proceeds from Sale of Assets	8,900	62,657	53,757	604%	TIMING	Increase in Insurance payout for Asset Disposal Proceeds by $54k
Non-Operating Grants, Subsidies for the Development of Assets	1,000,292	645,651	(354,641)	-35%	TIMING	Increase in LRCIP Grant $100k, Decrease in Commodity Route Grant $65k, Decrease Regional Road Group Grants $453k, Increase in Roads to Recovery Grant $64k.

SHIRE OF WOODANILLING
STATEMENT OF FINANCIAL POSITION
FOR THE PERIOD ENDING 31 MARCH 2025

	2023-2024 ACTUAL $	2024-2025 ACTUAL $	Variance $
Current assets			
Unrestricted Cash & Cash Equivalents	2,154,059	1,680,843	-473,215
Restricted Cash & Cash Equivalents - Reserves	1,024,762	1,035,395	10,633
Restricted Cash & Cash Equivalents - Other	5,000	-5,000	-10,000
Trade and other receivables	161,442	138,319	-23,123
Contract Assets	188,102	164,752	-23,350
Inventories	7,831	15,438	7,607
Other Assets	840	840	0
Total current assets	**3,542,035**	**3,030,588**	-511,447
Non-current assets			
WALGA LG House Unit Trust	41,585	41,585	0
Deferred Rates	17,110	17,110	0
BKW COOP Shares	0	0	
Land	522,000	522,000	0
Buildings	6,676,141	6,676,141	-0
Furniture & Equipment	78,759	109,094	30,335
Plant & Equipment	522,581	462,104	-60,477
Road Infrastructure	51,871,215	52,618,725	747,511
Footpath Infrastructure	179,170	179,170	0
Drainage Infrastructure	6,336,010	6,363,387	27,377
Parks & Ovals Infrastructure	788,169	804,987	16,818
Other infrastructure	189,884	189,884	0
Total non-current assets	**67,222,623**	**67,984,187**	761,564
Total assets	**70,764,658**	**71,014,775**	250,117
Current liabilities			
Trade and other payables	404,090	134,469	269,621
ATO Liabilities	22,462	17,767	4,696
Bonds & Deposits	13,822	8,732	5,090
Grant Liability	688,180	566,244	121,936
Provisions	71,628	71,628	0
Total current liabilities	**1,200,182**	**798,840**	401,342
Non-current liabilities			
Interest-bearing loans and borrowings	0	0	0
Provisions	5,882	5,882	0
Total non-current liabilities	**5,882**	**5,882**	0
Total liabilities	**1,206,064**	**804,722**	401,342
Net assets	**69,558,594**	**70,210,052**	651,459
Equity			
Retained surplus	12,063,448	12,052,814	-10,633
Net Result	0	651,459	651,459
Reserve - asset revaluation	56,470,384	56,470,384	0
Reserve - Cash backed	1,024,762	1,035,395	10,633
Total equity	**69,558,594**	**70,210,052**	651,459

SHIRE OF WOODANILLING
MONTHLY FINANCIAL REPORT
STATEMENT OF CASH FLOWS
FOR THE PERIOD ENDING 31 MARCH 2025

	2023-24 ACTUAL $	2024-25 BUDGET $	2024-25 ACTUAL $
Cash Flows from operating activities			
Payments			
Employee Costs	(1,254,046)	(909,264)	(808,700)
Materials & Contracts	(318,220)	(1,012,661)	(775,250)
Utilities (gas, electricity, water, etc)	(134,250)	(100,685)	(100,426)
Insurance	(113,746)	(112,410)	(115,985)
Interest Expense	0	0	0
Goods and Services Tax Paid	(31,602)	(150,000)	21,345
Other Expenses	(234,088)	(252,590)	(174,560)
	(2,085,952)	**(2,537,610)**	**(1,953,576)**
Receipts			
Rates	988,296	988,172	1,066,910
Operating Grants & Subsidies	1,541,748	225,116	221,614
Fees and Charges	280,613	276,594	291,921
Interest Earnings	21,387	9,800	16,576
Goods and Services Tax	0	150,000	0
Other	14,504	10,750	(114)
	2,846,548	**1,660,432**	**1,596,907**
Net Cash flows from Operating Activities	**760,596**	**(877,178)**	**(356,669)**
Cash flows from investing activities			
Payments			
Purchase of Land	0	0	0
Purchase of Buildings	(6,840)	(90,000)	0
Purchase of Plant and Equipment	(317,115)	(208,100)	(2,180)
Purchase of Furniture and Equipment	0	0	(30,335)
Purchase of Road Infrastructure Assets	(486,770)	(1,278,424)	(747,511)
Purchase of Footpath Assets	(71,392)	(50,000)	0
Purchase Drainage Assets	(43,382)	(109,727)	(27,377)
Purchase of Other Infrastructure Assets	(8,554)	(59,536)	(16,818)
Receipts			
Proceeds from Sale of Assets	104,245	24,000	62,657
Non-Operating grants used for Development of Assets	565,955	1,098,414	645,651
Net Cash Flows from Investing Activities	**(263,853)**	**(673,373)**	**(115,914)**
Cash flows from financing activities			
Repayment of Debentures	0	0	0
Revenue from Self Supporting Loans	0	0	0
Proceeds from New Debentures	0	0	0
Net cash flows from financing activities	**0**	**0**	**0**
Net increase/(decrease) in cash held	**496,743**	**(1,550,551)**	**(472,583)**
Cash at the Beginning of Reporting Period	**2,687,077**	**2,687,105**	**3,183,820**
Cash at the End of Reporting Period	**3,183,820**	**1,136,554**	**2,711,237**

SHIRE OF WOODANILLING
MONTHLY FINANCIAL REPORT
STATEMENT OF CASH FLOWS
FOR THE PERIOD ENDING 31 MARCH 2025

Notes

	2023-24 ACTUAL $	2024-25 BUDGET $	2024-25 ACTUAL $
RECONCILIATION OF CASH			
Cash at Bank - unrestricted	2,153,609	120,746	980,393
Cash at Bank - restricted	1,029,762	1,015,808	1,730,395
Cash on Hand	450	0	450
TOTAL CASH	**3,183,821**	**1,136,554**	**2,711,238**
RECONCILIATION OF NET CASH USED IN OPERATING ACTIVITIES TO OPERATING RESULT			
Net Result (As per Comprehensive Income Statement)	(926,344)	(359,297)	651,459
Add back Depreciation	1,835,197	865,691	0
(Gain)/Loss on Disposal of Assets	(20,548)	-	0
Adjustments to fair value of financial assets at fair value through profit and loss	(840)		0
Contributions for the Development of Assets	(565,954)	(1,098,414)	(645,651)
Changes in Assets and Liabilities			
(Increase)/Decrease in Inventory	(1,911)	-	(7,607)
(Increase)/Decrease in Receivables	(249,204)	-	46,473
(Increase)/Decrease in Other financial assets	-	-	0
Increase/(Decrease) in Accounts Payable	722,182	-	(401,343)
Increase/(Decrease) in Prepayments	-	-	0
Increase/(Decrease) in Employee Provisions	(31,981)	-	0
Increase/(Decrease) in other liabilities	-	(285,158)	
NET CASH FROM/(USED) IN OPERATING ACTIVITIES	**760,596**	**(877,178)**	**(356,669)**

SHIRE OF WOODANILLING
MONTHLY FINANCIAL REPORT
FOR THE PERIOD ENDING 31 MARCH 2025

CAPITAL EXPENDITURE PROGRAM

COA	Description	Resp. Officer	Asset Class	Asset Invest. Type	2024/2025 Total Budget	2024/2025 YTD Budget	2024/2025 YTD Actuals	% of Annual Budget
Governance								
042310	Administration Furniture & Equipment - New Server	CEO	F&E	Renewal	33,700	33,700	30,335	90%
					33,700	**33,700**	**30,335**	
Law, Order & Public Safety								
LRC319	CCTV & Street Lighting	EMI	P&E	Upgrade	12,000	12,000	2,180	18%
					12,000	**12,000**	**2,180**	
Community Amenities								
DWER1	Dwer Dam Project	EMI	DRAIN	Upgrade	66,345	21,894	27,377	41%
LRC450	LRCI 4A - Woodanilling Townsite Enhancement	EMI	OTHER	Upgrade	105,000	105,000	16,818	16%
					171,345	**126,894**	**44,195**	
Recreation & Culture								
BC004	Town Hall Acess Railing	EMI	L&B	Upgrade	5,000	5,000	0	0%
					5,000	**5,000**	**0**	
Transport								
RRG67	RRG - Oxley Road	EMI	ROAD	Renewal	301,927	301,927	4,134	1%
RGA66	Robinson Rd West - Reconstruct, Widen, Seal	EMI	ROAD	Upgrade	502,075	502,074	70,228	14%
R2R35	RTR/LRCI4A - Burt Road	EMI	ROAD	Renewal	170,000	170,000	90,686	53%
R2R63	RTR - Oxley Road C/Over 23-24 (Pavement Repairs)	EMI	ROAD	Renewal	353,942	353,942	354,491	100%
R2R263	RTR - Oxley Road (Shoulder Rehab)	EMI	ROAD	Renewal	24,690	24,690	0	0%
R2R60	RTR - Youngs Road (Reform & Resheet)	EMI	ROAD	Renewal	30,000	30,000	22,641	75%
R2R73	RTR - Gorn Road	EMI	ROAD	Renewal	15,000	15,000	3,361	22%
R2R75	Robinson West Road (Shoulder Rehab)	EMI	ROAD	Renewal	40,000	40,000	5,305	13%
R2R76	Orchard Road Floodway	EMI	ROAD	Renewal	50,000	50,000	8,373	17%
CRF01	CRF - Leggoe Road Construction	EMI	ROAD	Renewal	163,353	163,353	139,475	85%
LRC400	LRCI4B - Ashwell Road	EMI	ROAD	Renewal	51,500	0	2,058	4%
LRC401	LRCI4B - Dinwoodie Road	EMI	ROAD	Renewal	23,190	23,190	676	3%
LRC402	LRCI4B - Sandplain Road Floodway	EMI	ROAD	Renewal	40,000	40,000	676	2%
LRC403	LRCI4B - Douglas Road	EMI	ROAD	Renewal	20,000	0	45,406	227%
					1,785,677	**1,714,176**	**747,511**	
	Total Capital Expenditure				**2,007,722**	**1,891,770**	**824,221**	**41%**

SUMMARIES:				
Land & Buildings	5,000	5,000	0	0.0%
Plant & Equipment	12,000	12,000	2,180	18.2%
Furn & Equipment	33,700	33,700	30,335	90.0%
Infrastructure - Roads	1,785,677	1,714,176	747,511	41.9%
Infrastructure - Footpaths	0	0	0	0.0%
Infrastructure - Drainage	66,345	21,894	27,377	41.3%
Infrastructure - Parks & Ovals	0	0	0	0.0%
Infrastructure - Other	105,000	105,000	16,818	16.0%
	2,007,722	**1,891,770**	**824,221**	**41.1%**
At No Cost	0	0	0	0.0%
Asset Renewal	1,317,302	1,245,802	707,618	53.7%
New Asset	0	0	0	0.0%
Upgrading Asset	690,420	645,968	116,603	16.9%
	2,007,722	**1,891,770**	**824,221**	**41.1%**
Chief Executive Officer	33,700	33,700	30,335	90.0%
Executive Manager Infrastructure	1,974,022	1,858,070	793,886	40.2%
	2,007,722	**1,891,770**	**824,221**	**41.1%**

SHIRE OF WOODANILLING
MONTHLY FINANCIAL REPORT
STATEMENT OF CAPITAL GRANTS & CONTRACT LIABILITIES
FOR THE PERIOD ENDING 31 MARCH 2025

UNSPENT CAPITAL GRANTS Grant Provider	Liability 1 July 2024	Increase in Liability	Liability Recorded as Revenue	Closing Liability	Adopted Budget Revenue	Amended Budget Revenue	YTD Budget	YTD Actual Revenue
Community Amenities								
Dept of Water - Country Water Supply Grant	-	-	-	-	40,014	-	-	-
Transport								
WA Local Government Grants Commission - Special Bridge Funding BR4849	314,000	-	-	314,000	-	-	-	-
DITRDC - Roads to Recovery Funding 2023-2024	323,634	103,496	(427,130)	-	511,880	-	363,515	427,130
Main Roads WA - RRG Funding	50,546	155,734	(74,362)	131,918	527,881	-	527,876	74,362
Main Roads WA - Commodity Route Funding	-	43,568	(43,568)	-	108,902	-	108,901	43,568
DITRDC - LRCI Funding - 4A and 4B	-	220,917	(100,591)	120,326	531,685	-	-	100,591
Total Unspent Capital Grants	**688,180**	**523,715**	**(645,651)**	**566,244**	**1,680,348**	**-**	**1,000,292**	**645,651**

CONTRACT LIABILITIES Grant Provider	Liability 1 July 2024	Increase in Liability	Liability Recorded as Revenue	Closing Liability	Adopted Budget Revenue	Amended Budget Revenue	YTD Budget	YTD Actual Revenue
Law, Order and Public Safety								
DFES - ESL Operating Grant	-	23,095	(23,095)	-	34,580	-	17,290	23,095
DFES - Mitigation Activity Grant	-	27	(27)	-	62,849	-	32,849	27
Total Contract Liabilities	**-**	**23,122**	**(23,122)**	**-**	**97,429**	**-**	**50,139**	**23,122**
TOTAL LIABILITIES & REVENUE	**688,180**	**546,837**	**(668,773)**	**566,244**	**1,777,777**	**0**	**1,050,431**	**668,773**

SHIRE OF WOODANILLING
MONTHLY FINANCIAL REPORT
FOR THE PERIOD ENDING 31 MARCH 2025

RESERVES - CASH BACKED	2024-25 Actual Opening Balance	2024-25 Actual Transfer to	2024-25 Actual Transfer (from)	2024-25 Actual Closing Balance	2024-25 Budget Opening Balance	2024-25 Budget Transfer to	2024-25 Budget Transfer (from)	2024-25 Budget Closing Balance
Staff Leave Reserve	70,800	735	0	71,535	45,725	400	0	46,125
Plant Reserve	719,417	7,465	0	726,882	835,080	80,571	0	915,651
Building Reserve	93,402	969	0	94,371	68,289	130,851	0	199,140
Office Equipment Reserve	14,355	149	0	14,504	14,331	26,551	0	40,882
Road Construction Reserve	22,125	230	0	22,355	22,089	200	0	22,289
Affordable Housing Reserve	104,663	1,086	0	105,749	104,491	990	(105,481)	0
	1,024,762	**10,633**	**0**	**1,035,395**	**1,090,005**	**239,563**	**(105,481)**	**1,224,087**

SHIRE OF WOODANILLING
MONTHLY FINANCIAL REPORT

G/L	JOB	Details By Function Under The Following Program Titles And Type Of Activities Within The Programme	CURRENT YEAR COMPARATIVES 31 MARCH 2025 Budget	Actual	CURRENT YEAR 31 MARCH 2025 Income	Expenditure	ADOPTED BUDGET 2024-25 Income	Expenditure	AMENDED BUDGET 30 JUNE 2025 Income	Expenditure
		Proceeds Sale of Assets								
005265		Proceeds On Asset Disposal P&E	($8,900)	($62,657)	($62,657)	$0	($8,900)	$0	($7,957)	$0
		PROCEEDS FROM SALE OF ASSETS	($8,900)	($62,657)	($62,657)	$0	($8,900)	$0	($7,957)	$0
		Written Down Value					$0	$0	$0	$0
005270		Written Down Value - Works Plant	$8,900	$0	$0	$0	$0	$8,900	$0	$7,957
		Sub Total - WDV ON DISPOSAL OF ASSET	$8,900	$0	$0	$0	$0	$8,900	$0	$7,957
		Total - GAIN/LOSS ON DISPOSAL OF ASSET	$0	($62,657)	**($62,657)**	**$0**	**($8,900)**	**$8,900**	**($7,957)**	**$7,957**
		ABNORMAL ITEMS	$0	$0			$0	$0	$0	$0
		Sub Total - ABNORMAL ITEMS	$0	$0			$0	$0	$0	$0
		Total - ABNORMAL ITEMS	$0	$0	$0	$0	$0	$0	$0	$0
		Total - OPERATING STATEMENT	**$0**	**($62,657)**	**($62,657)**	**$0**	**($8,900)**	$8,900	($7,957)	$7,957

SHIRE OF WOODANILLING
MONTHLY FINANCIAL REPORT

G/L	JOB	Details By Function Under The Following Program Titles And Type Of Activities Within The Programme	CURRENT YEAR COMPARATIVES 31 MARCH 2025 Budget	Actual	CURRENT YEAR 31 MARCH 2025 Income	Expenditure	ADOPTED BUDGET 2024-25 Income	Expenditure	AMENDED BUDGET 30 JUNE 2025 Income	Expenditure
		RATES								
		OPERATING EXPENDITURE								
031010		Expenses Relating to Valuations & Title Searches	$259	$598	$0	$598	$0	$16,520	$0	$16,970
031020		Rates Write Offs	$192	$230	$0	$230	$0	$200	$0	$200
031000		Expenses Relating to Rates	$14,838	$12,359	$0	$12,359	$0	$19,346	$0	$19,828
		Sub Total - GENERAL RATES OP EXP	$15,289	$13,186	$0	$13,186	$0	$36,066	$0	$36,998
		OPERATING INCOME								
031200		General Rates Levied	($1,127,249)	($1,127,250)	($1,127,250)	$0	($1,127,249)	$0	($1,127,250)	$0
031210		Ex-Gratia Rates Received	($2,087)	$0	$0	$0	($2,087)	$0	($2,087)	$0
031220		Non Payment Penalty	($4,250)	($5,610)	($5,610)	$0	($5,000)	$0	($5,000)	$0
031230		Rates Discount Allowed	$54,800	$50,056	$50,056	$0	$54,800	$0	$49,744	$0
031240		Interim Rates Levied	$0	$2,050	$2,050	$0	($8,000)	$0	$2,252	$0
031250		Instalment Interest Received	($400)	($333)	($333)	$0	($400)	$0	($400)	$0
031260		Rates Administration Fee Received	($400)	($380)	($380)	$0	($400)	$0	($400)	$0
031270		Pens Deferred Rates Interest Grant	$0	($483)	($483)	$0	($400)	$0	($483)	$0
031280		Other Income Relating to Rates	($840)	($1,500)	($1,500)	$0	($1,000)	$0	($1,200)	$0
		Sub Total - GENERAL RATES OP INC	($1,080,426)	($1,083,450)	($1,083,450)	$0	($1,089,736)	$0	($1,084,824)	$0
		Total - GENERAL RATES	($1,065,137)	($1,070,264)	($1,083,450)	$13,186	($1,089,736)	$36,066	($1,084,824)	$36,998

SHIRE OF WOODANILLING
MONTHLY FINANCIAL REPORT

G/L	JOB	Details By Function Under The Following Program Titles And Type Of Activities Within The Programme	CURRENT YEAR COMPARATIVES 31 MARCH 2025 Budget	Actual	CURRENT YEAR 31 MARCH 2025 Income	Expenditure	ADOPTED BUDGET 2024-25 Income	Expenditure	AMENDED BUDGET 30 JUNE 2025 Income	Expenditure
		OTHER GENERAL PURPOSE FUNDING								
		OPERATING EXPENDITURE								
032000		General Purpose Funding - Admin Allocations	$13,140	$11,280	$0	$11,280	$0	$17,516	$0	$17,984
		Sub Total - OTHER GENERAL PURPOSE FUNDING OP/EXP	$13,140	$11,280	$0	$11,280	$0	$17,516	$0	$17,984
		OPERATING INCOME								
032010		Grants Commission General	($19,227)	($66,413)	($66,413)	$0	($25,636)	$0	($88,550)	$0
032020		Grants Commission Grant - Roads	($12,835)	($28,245)	($28,245)	$0	($17,113)	$0	($37,660)	$0
032030		Grants Commission Grant - Special Bridge Funding	$0	$0	$0	$0	$0	$0	$0	$0
032040		Interest on Reserve Investments	($12,800)	($10,633)	($10,633)	$0	($20,000)	$0	($16,700)	$0
032060		LRCIP Grant funding	$0	($100,591)	($100,591)	$0	($531,685)	$0	($368,194)	$0
032080		Interest on Municipal Funds	$0	$0	$0	$0	$0	$0	($3,300)	$0
		Sub Total - OTHER GENERAL PURPOSE FUNDING OP/INC	($44,862)	($205,882)	($205,882)	$0	($594,434)	$0	($514,404)	$0
		Total - OTHER GENERAL PURPOSE FUNDING	($31,722)	($194,602)	($205,882)	$11,280	($594,434)	$17,516	($514,404)	$17,984
		Total - GENERAL PURPOSE FUNDING	**($1,096,859)**	**($1,264,866)**	**($1,289,332)**	**$24,466**	**($1,684,170)**	**$53,582**	**($1,599,228)**	**$54,982**

SHIRE OF WOODANILLING
MONTHLY FINANCIAL REPORT

G/L	JOB	Details By Function Under The Following Program Titles And Type Of Activities Within The Programme	CURRENT YEAR COMPARATIVES 31 MARCH 2025 Budget	Actual	CURRENT YEAR 31 MARCH 2025 Income	Expenditure	ADOPTED BUDGET 2024-25 Income	Expenditure	AMENDED BUDGET 30 JUNE 2025 Income	Expenditure
		MEMBERS OF COUNCIL								
		OPERATING EXPENDITURE								
041010		Members of Council - Conference Expenses	$9,000	$9,297	$0	$9,297	$0	$9,000	$0	$9,297
041020		Members of Council - Elections	$0	$0	$0	$0	$0	$0	$0	$0
041030		Members of Council - President & Deputy Allowances	$4,150	$4,150	$0	$4,150	$0	$8,300	$0	$8,300
041040		Members of Council - Insurance	$5,382	$1,485	$0	$1,485	$0	$5,380	$0	$1,485
041050		Members of Council - Subscriptions & Publications	$1,590	$8,457	$0	$8,457	$0	$1,590	$0	$9,447
041070		Members of Council - Councillor Allowances	$15,150	$15,150	$0	$15,150	$0	$30,300	$0	$30,300
041080		Members of Council - Refreshments & Receptions	$7,830	$4,106	$0	$4,106	$0	$9,000	$0	$9,000
041090		Members of Council - Councillor Training	$8,000	$1,850	$0	$1,850	$0	$10,000	$0	$10,000
041100		Members of Council - Chamber Maintenance	$2,774	$0	$0	$0	$0	$2,830	$0	$2,830
041110		Members of Council - Expenses Related to members	$119,577	$102,144	$0	$102,144	$0	$159,776	$0	$194,453
041130		Members of Council - Integrated Planning & Other	$6,000	$0	$0	$0	$0	$6,000	$0	$0
041140		Members of Council - Expenses Relating to 4WDL VROC	$6,800	$2,068	$0	$2,068	$0	$6,800	$0	$6,800
041150		Members of Council - Donations Expenses	$11,000	$50	$0	$50	$0	$11,000	$0	$11,000
041160		Members of Council - Australia Day Expenses	$10,000	$14,692	$0	$14,692	$0	$10,000	$0	$10,000
041170		Members - Community Events	$11,250	$7,761	$0	$7,761	$0	$15,000	$0	$7,500
041400		Members of Council - Travelling	$2,000	$0	$0	$0	$0	$2,000	$0	$2,000
		Sub Total - MEMBERS OF COUNCIL OP/EXP	$220,503	$171,210	$0	$171,210	$0	$286,976	$0	$312,412
		OPERATING INCOME								
041200		Members - Contributions & Donations	$0	$0	$0	$0	$0	$0	$0	$0
041250		Members - Operating Grants	($7,500)	$0	$0	$0	($15,000)	$0	$0	$0
041220		Members - Australia Day Grant Income	($10,000)	($8,000)	($8,000)	$0	($10,000)	$0	($10,000)	$0
041230		Members - Income Relating to 4WDL VROC	$0	$0	$0	$0	$0	$0	$0	$0
041500		Initial Recognition of Assets	$0	$0	$0	$0	$0	$0	$0	$0
		Sub Total - MEMBERS OF COUNCIL OP/INC	($17,500)	($8,000)	($8,000)	$0	($25,000)	$0	($10,000)	$0
		Total - MEMBERS OF COUNCIL	$203,003	$163,210	($8,000)	$171,210	($25,000)	$286,976	($10,000)	$312,412

SHIRE OF WOODANILLING
MONTHLY FINANCIAL REPORT

G/L	JOB	Details By Function Under The Following Program Titles And Type Of Activities Within The Programme	CURRENT YEAR COMPARATIVES 31 MARCH 2025 Budget	Actual	CURRENT YEAR 31 MARCH 2025 Income	Expenditure	ADOPTED BUDGET 2024-25 Income	Expenditure	AMENDED BUDGET 30 JUNE 2025 Income	Expenditure
		GOVERNANCE								
		OPERATING EXPENDITURE								
042000		Expenses Relating to Administration	$418,409	$361,868	$0	$361,868	$0	$531,955	$0	$570,613
042010		Governance - Admin Office Maintenance	$4,212	$2,385	$0	$2,385	$0	$6,020	$0	$6,192
042016		Governance - Insurance	$36,694	$40,148	$0	$40,148	$0	$36,689	$0	$40,148
042020		Governance - Admin Office Garden Maintenance	$1,583	$1,986	$0	$1,986	$0	$2,100	$0	$2,100
042030		Governance - Office Equipment Maintenance	$5,325	$2,045	$0	$2,045	$0	$7,500	$0	$5,500
042040		Governance - Consulting & Relief Staff	$128,545	$106,553	$0	$106,553	$0	$143,298	$0	$165,438
042050		Governance - Advertising	$1,395	$601	$0	$601	$0	$1,500	$0	$1,500
042060		Governance - Postage & Freight	$674	$206	$0	$206	$0	$1,305	$0	$1,305
042070		Governance - Computer Equipment Maintenance	$48,283	$62,235	$0	$62,235	$0	$63,943	$0	$72,765
042080		Governance - Bank Charges	$2,059	$2,846	$0	$2,846	$0	$2,900	$0	$3,130
042090		Governance - Telephone Expenses	$3,900	$3,447	$0	$3,447	$0	$5,000	$0	$5,000
042110		Governance - Legal Expenses	$1,503	$409	$0	$409	$0	$2,000	$0	$2,000
042115		Governance - Valuation Expenses Other than Rates	$0	$0	$0	$0	$0	$0	$0	$0
042120		Governance - Administration Staff Training	$5,900	$323	$0	$323	$0	$10,000	$0	$5,000
042121		Governance - Audit Fees	$41,000	$39,400	$0	$39,400	$0	$41,000	$0	$39,400
042130		Governance - Printing & Stationery	$2,160	$498	$0	$498	$0	$3,000	$0	$3,000
042140		Governance - FBT	$13,625	$15,960	$0	$15,960	$0	$25,000	$0	$25,000
042160		Governance - Staff Uniforms	$960	$309	$0	$309	$0	$1,500	$0	$1,500
042165		Governance - Admin Subscriptions	$26,135	$15,933	$0	$15,933	$0	$26,135	$0	$16,068
042170		Governance - Grants & Workshop Expenses	$0	$0	$0	$0	$0	$0	$0	$0
042180		Governance - Admin Costs Recovered	($742,362)	($587,500)	$0	($587,500)	$0	($910,845)	$0	($965,659)
		Sub Total - GOVERNANCE - GENERAL OP/EXP	$0	$69,650	$0	$69,650	$0	$0	$0	$0
		OPERATING INCOME								
042200		Governance - Reimbursements Administration	$0	$0	$0	$0	$0	$0	$0	$0
042220		Governance - Photocopies & Misc Cash Sales	($72)	$0	$0	$0	($100)	$0	$0	$0
042703		Governance - Unders & Overs	$36	($3)	($3)	$0	$50	$0	$50	$0
		Sub Total - GOVERNANCE - GENERAL OP/INC	($36)	($3)	($3)	$0	($50)	$0	$50	$0
		Total - GOVERNANCE - GENERAL	($36)	$69,647	($3)	$69,650	($50)	$0	$50	$0
		Total - GOVERNANCE	**$202,967**	**$232,856**	**($8,003)**	**$240,859**	**($25,050)**	**$286,976**	**($9,950)**	**$312,412**

SHIRE OF WOODANILLING
MONTHLY FINANCIAL REPORT

G/L	JOB	Details By Function Under The Following Program Titles And Type Of Activities Within The Programme	CURRENT YEAR COMPARATIVES 31 MARCH 2025 Budget	Actual	CURRENT YEAR 31 MARCH 2025 Income	Expenditure	ADOPTED BUDGET 2024-25 Income	Expenditure	AMENDED BUDGET 30 JUNE 2025 Income	Expenditure
		LAW, ORDER AND PUBLIC SAFETY								
		FIRE PREVENTION								
		OPERATING EXPENDITURE								
051000		Fire Prevention - Expenses Relating to Fire Prevention	$30,025	$22,584	$0	$22,584	$0	$42,629	$0	$42,764
051030		Fire Prevention - Expenses in relation to MAF	$47,427	$15,406	$0	$15,406	$0	$54,935	$0	$25,316
051040		Fire Prevention - Other Fire Fighting Expenses	$525	$135	$0	$135	$0	$700	$0	$700
051050		Fire Prevention - Expenses Related to ESL	$29,579	$39,673	$0	$39,673	$0	$34,360	$0	$38,227
		Sub Total - FIRE PREVENTION OP/EXP	$107,556	$77,798	$0	$77,798	$0	$132,624	$0	$107,007
		OPERATING INCOME								
051200		Fire Prevention - Income Relating to MAF Projects	($32,849)	($27)	($27)	$0	($62,849)	$0	$0	$0
051210		Fire Prevention - LGGS - Bushfire Grant Income	($17,290)	($23,095)	($23,095)	$0	($34,580)	$0	($34,580)	$0
051211		Fire Prevention - DFES ESL Administration Fee Income	$0	($4,000)	($4,000)	$0	$0	$0	($4,000)	$0
		Sub Total - FIRE PREVENTION OP/INC	($50,139)	($27,122)	($27,122)	$0	($97,429)	$0	($38,580)	$0
		Total - FIRE PREVENTION	$57,417	$50,676	($27,122)	$77,798	($97,429)	$132,624	($38,580)	$107,007

SHIRE OF WOODANILLING
MONTHLY FINANCIAL REPORT

G/L	JOB	Details By Function Under The Following Program Titles And Type Of Activities Within The Programme	CURRENT YEAR COMPARATIVES 31 MARCH 2025 Budget	Actual	CURRENT YEAR 31 MARCH 2025 Income	Expenditure	ADOPTED BUDGET 2024-25 Income	Expenditure	AMENDED BUDGET 30 JUNE 2025 Income	Expenditure
		ANIMAL CONTROL								
		OPERATING EXPENDITURE								
052000		Animal Control - Expenses Relating to Animal Control	$10,418	$10,425	$0	$10,425	$0	$13,882	$0	$13,980
		Sub Total - ANIMAL CONTROL OP/EXP	$10,418	$10,425	$0	$10,425	$0	$13,882	$0	$13,980
		OPERATING INCOME								
052200		Animal Control - Fines & Penalties	$0	($800)	($800)	$0	$0	$0	($800)	$0
052210		Animal Control - Dog Registrations	($1,000)	($4,128)	($4,128)	$0	($1,000)	$0	($4,028)	$0
052220		Animal Control - Cat Registrations & Infringement Income	($500)	($40)	($40)	$0	($500)	$0	($500)	$0
		Sub Total - ANIMAL CONTROL OP/INC	($1,500)	($4,968)	($4,968)	$0	($1,500)	$0	($5,328)	$0
		Total - ANIMAL CONTROL	$8,918	$5,458	($4,968)	$10,425	($1,500)	$13,882	($5,328)	$13,980
		OTHER LAW ORDER & PUBLIC SAFETY								
		OPERATING EXPENDITURE								
053000		Other Law - Expenses Relating to Other Law, Order & Public Safety	$29,931	$19,799	$0	$19,799	$0	$38,592	$0	$35,412
		Sub Total - OTHER LAW ORDER & PUBLIC SAFETY OP/EXP	$29,931	$19,799	$0	$19,799	$0	$38,592	$0	$35,412
		OPERATING INCOME								
		Sub Total - OTHER LAW ORDER & PUBLIC SAFETY OP /INC	$0	$0	$0	$0	$0	$0	$0	$0
		Total - OTHER LAW ORDER PUBLIC SAFETY	$29,931	$19,799	$0	$19,799	$0	$38,592	$0	$35,412
		Total - LAW ORDER & PUBLIC SAFETY	**$96,266**	**$75,932**	**($32,090)**	**$108,021**	**($98,929)**	**$185,098**	**($43,908)**	**$156,399**

SHIRE OF WOODANILLING
MONTHLY FINANCIAL REPORT

G/L	JOB	Details By Function Under The Following Program Titles And Type Of Activities Within The Programme	CURRENT YEAR COMPARATIVES 31 MARCH 2025 Budget	Actual	CURRENT YEAR 31 MARCH 2025 Income	Expenditure	ADOPTED BUDGET 2024-25 Income	Expenditure	AMENDED BUDGET 30 JUNE 2025 Income	Expenditure
		HEALTH ADMINISTRATION & INSPECTION								
		OPERATING EXPENDITURE								
074000		PREV SRVCS - Expenses Relating to Preventative Services	$12,555	$7,314	$0	$7,314	$0	$16,748	$0	$16,822
074020		PREV SRVCS - Analytical Expenses	$378	$372	$0	$372	$0	$378	$0	$378
		Sub Total - HEALTH ADMIN & INSPECTION OP/EXP	$12,933	$7,686	$0	$7,686	$0	$17,126	$0	$17,200
		OPERATING INCOME								
074210		Health - Septic Tank Fees	($230)	($118)	($118)	$0	($230)	$0	($230)	$0
		Sub Total - HEALTH ADMIN & INSPECTION OP/INC	($230)	($118)	($118)	$0	($230)	$0	($230)	$0
		Total - HEALTH ADMIN & INSPECTION	$12,703	$7,568	($118)	$7,686	($230)	$17,126	($230)	$17,200
		PREVENTIVE SERVICES- PEST CONTROL								
		OPERATING EXPENDITURE								
077000		Pest - Expenses Relating to Other Health	$25,893	$22,266	$0	$22,266	$0	$34,532	$0	$35,456
077010		Pest - Mosquito Control	$4,650	$0	$0	$0	$0	$4,650	$0	$4,650
		Sub Total - PEST CONTROL OP/EXP	$30,543	$22,266	$0	$22,266	$0	$39,182	$0	$40,106
		OPERATING INCOME								
077200		Pest - Income Relating to Other Health	($200)	($200)	($200)	$0	($200)	$0	($200)	$0
		Sub Total - PEST CONTROL OP/INC	($200)	($200)	($200)	$0	($200)	$0	($200)	$0
		Total - PEST CONTROL	$30,343	$22,066	($200)	$22,266	($200)	$39,182	($200)	$40,106

SHIRE OF WOODANILLING
MONTHLY FINANCIAL REPORT

G/L	JOB	Details By Function Under The Following Program Titles And Type Of Activities Within The Programme	CURRENT YEAR COMPARATIVES 31 MARCH 2025 Budget	Actual	CURRENT YEAR 31 MARCH 2025 Income	Expenditure	ADOPTED BUDGET 2024-25 Income	Expenditure	AMENDED BUDGET 30 JUNE 2025 Income	Expenditure
		OTHER HEALTH								
		OPERATING EXPENDITURE								
076000		Other Health - Expenses Relating to Other Health	$1,656	$1,410	$0	$1,410	$0	$2,205	$0	$2,264
		Sub Total - OTHER HEALTH OP/EXP	$1,656	$1,410	$0	$1,410	$0	$2,205	$0	$2,264
		OPERATING INCOME								
			$0	$0	$0	$0	$0	$0	$0	$0
		Sub Total - OTHER HEALTH OP/INC	$0	$0	$0	$0	$0	$0	$0	$0
		Total - OTHER HEALTH	$1,656	$1,410	$0	$1,410	$0	$2,205	$0	$2,264
		Total - HEALTH	**$44,702**	**$31,044**	**($318)**	**$31,362**	**($430)**	**$58,513**	**($430)**	**$59,570**

SHIRE OF WOODANILLING
MONTHLY FINANCIAL REPORT

G/L	JOB	Details By Function Under The Following Program Titles And Type Of Activities Within The Programme	CURRENT YEAR COMPARATIVES 31 MARCH 2025 Budget	Actual	CURRENT YEAR 31 MARCH 2025 Income	Expenditure	ADOPTED BUDGET 2024-25 Income	Expenditure	AMENDED BUDGET 30 JUNE 2025 Income	Expenditure
		AGED & DISABLED - OTHER								
		OPERATING EXPENDITURE								
082000		Aged & Disabled - Allocation of Admin Overheads	$585	$529	$0	$529	$0	$775	$0	$796
084000		Aged & Disabled - Expenses Relating to the Aged	$27,609	$0	$0	$0	$0	$36,825	$0	$36,825
084010		**Aged & Disabled - Expenses relating to Well Aged Housing**	$46,196	$28,409	$0	$28,409				
084010	SGC	Salmon Gums - Common Areas					$0	$10,535	$0	$11,678
084010	SG1	UNIT 1 Salmon Gums					$0	$5,753	$0	$5,933
084010	SG2	UNIT 2 Salmon Gums					$0	$5,588	$0	$5,565
084010	SG3	UNIT 3 Salmon Gums					$0	$5,588	$0	$5,690
084010	SG4	UNIT 4 Salmon Gums					$0	$5,390	$0	$5,590
084010	WVC	WATTLEVILLE COMMON LAND					$0	$6,025	$0	$6,525
084010	WV1	UNIT 1 WATTLEVILLE					$0	$5,526	$0	$5,478
084010	WV2	UNIT 2 WATTLEVIEW					$0	$4,533	$0	$4,582
084010	WV3	UNIT 3 WATTLEVILLE					$0	$6,818	$0	$5,293
		Sub Total - OTHER WELFARE OP/EXP	$74,390	$28,938	$0	$28,938	$0	$93,356	$0	$93,955
		OPERATING INCOME								
084200		Aged & Disabled - Income Relating to Well Aged Housing	($94,370)	($53,477)	($53,477)	$0	($108,589)	$0	($102,089)	$0
084210		Aged & Disabled - Seniors Week Grants	$0	$0	$0	$0	$0	$0	$0	$0
		Sub Total - OTHER WELFARE OP/INC	($94,370)	($53,477)	($53,477)	$0	($108,589)	$0	($102,089)	$0
		Total - OTHER WELFARE	($19,980)	($24,538)	($53,477)	$28,938	($108,589)	$93,356	($102,089)	$93,955
		Total - EDUCATION & WELFARE	**($19,980)**	**($24,538)**	**($53,477)**	**$28,938**	**($108,589)**	**$93,356**	**($102,089)**	**$93,955**

SHIRE OF WOODANILLING
MONTHLY FINANCIAL REPORT

G/L	JOB	Details By Function Under The Following Program Titles And Type Of Activities Within The Programme	CURRENT YEAR COMPARATIVES 31 MARCH 2025 Budget	Actual	CURRENT YEAR 31 MARCH 2025 Income	Expenditure	ADOPTED BUDGET 2024-25 Income	Expenditure	AMENDED BUDGET 30 JUNE 2025 Income	Expenditure
		STAFF HOUSING								
		OPERATING EXPENDITURE								
091000		Staff Housing - Maintenance 3340 Robinson Road (EMI)	$13,789	$13,551	$0	$13,551	$0	$17,625	$0	$18,008
091005		Staff Housing - Administration Allocations	$13,131	$11,280	$0	$11,280	$0	$17,516	$0	$17,984
091110		Staff Housing - Maintenance 3347 Robinson Road (SFO)	$7,541	$9,065	$0	$9,065	$0	$9,071	$0	$9,136
091220		Staff Housing - Maintenance 3327 Robinson Road (CEO)	$18,462	$11,860	$0	$11,860	$0	$22,346	$0	$22,527
091330		Staff Housing - Maintenance 13 Cardigan Street (Other not Staff))	$8,849	$9,018	$0	$9,018	$0	$9,603	$0	$12,562
							$0	$0		
		Sub Total - STAFF HOUSING OP/EXP	$61,772	$54,774	$0	$54,774	$0	$76,161	$0	$80,217
		OPERATING INCOME								
091200		Staff Housing - Income 3340 Robinson Road	$0	$0	$0	$0	$0	$0	$0	$0
091210		Staff Housing - Income 3347 Robinson Road	($2,727)	($5,850)	($5,850)	$0	($3,640)	$0	($4,200)	$0
091230		Staff Housing - Income 13 Cardigan Street	($6,777)	($6,860)	($6,860)	$0	($9,040)	$0	($9,840)	$0
091500		Staff Housing - Staff Housing Reimbursements - Utilities	($225)	($1,123)	($1,123)	$0	($300)	$0	($340)	$0
		Sub Total - STAFF HOUSING OP/INC	($9,729)	($13,833)	($13,833)	$0	($12,980)	$0	($14,380)	$0
		Total - STAFF HOUSING	$52,043	$40,941	($13,833)	$54,774	($12,980)	$76,161	($14,380)	$80,217
		Total - HOUSING	**$52,043**	**$40,941**	**($13,833)**	**$54,774**	**($12,980)**	**$76,161**	**($14,380)**	**$80,217**

SHIRE OF WOODANILLING
MONTHLY FINANCIAL REPORT

G/L	JOB	Details By Function Under The Following Program Titles And Type Of Activities Within The Programme	CURRENT YEAR COMPARATIVES 31 MARCH 2025 Budget	Actual	CURRENT YEAR 31 MARCH 2025 Income	Expenditure	ADOPTED BUDGET 2024-25 Income	Expenditure	AMENDED BUDGET 30 JUNE 2025 Income	Expenditure
		SANITATION - HOUSEHOLD REFUSE								
		OPERATING EXPENDITURE								
100000		Sanitation Household - Expenses Relating to Refuse Collection	$30,567	$36,561	$0	$36,561	$0	$40,751	$0	$55,587
100010		Sanitation Household - Expenses Relating to Recycling	$18,081	$14,627	$0	$14,627	$0	$24,115	$0	$24,115
100020		Sanitation Household - Tip Maintenance Costs	$61,210	$69,039	$0	$69,039	$0	$73,800	$0	$72,111
		Sub Total - SANITATION HOUSEHOLD REFUSE OP/EXP	$109,858	$120,226	$0	$120,226	$0	$138,666	$0	$151,813
		OPERATING INCOME								
100200		Sanitation Household - Income Relating to Tip - Refuse & Recycling	($59,465)	($58,439)	($58,439)	$0	($59,465)	$0	($58,737)	$0
		Sub Total - SANITATION H/HOLD REFUSE OP/INC	($59,465)	($58,439)	($58,439)	$0	($59,465)	$0	($58,737)	$0
		Total - SANITATION HOUSEHOLD REFUSE	$50,393	$61,787	($58,439)	$120,226	($59,465)	$138,666	($58,737)	$151,813
		SANITATION OTHER								
		OPERATING EXPENDITURE								
101000		Sanitation Other - Expenses Relating to Commercial Refuse Collectio	$3,285	$2,820	$0	$2,820	$0	$4,381	$0	$4,499
		Sub Total - SANITATION OTHER OP/EXP	$3,285	$2,820	$0	$2,820	$0	$4,381	$0	$4,499
		OPERATING INCOME								
		Sub Total - SANITATION OTHER OP/INC	$0	$0	$0	$0	$0	$0	$0	$0
		Total - SANITATION OTHER	$3,285	$2,820	$0	$2,820	$0	$4,381	$0	$4,499

SHIRE OF WOODANILLING
MONTHLY FINANCIAL REPORT

G/L	JOB	Details By Function Under The Following Program Titles And Type Of Activities Within The Programme	CURRENT YEAR COMPARATIVES 31 MARCH 2025 Budget	Actual	CURRENT YEAR 31 MARCH 2025 Income	Expenditure	ADOPTED BUDGET 2024-25 Income	Expenditure	AMENDED BUDGET 30 JUNE 2025 Income	Expenditure
		PROTECTION OF THE ENVIRONMENT								
		OPERATING EXPENDITURE								
106000		Protect Env - Expenses Relating to Protection of the Environment	$1,692	$1,469	$0	$1,469	$0	$2,252	$0	$2,312
106010		Protect Env - Expenses Relating to WWLZ	$5,901	$2,822	$0	$2,822	$0	$7,489	$0	$7,512
106020		Protect Env - Council Contribution to WWLZ	$15,750	$0	$0	$0	$0	$15,750	$0	$15,750
		Sub Total - PROTECTION OF THE ENVIRONMENT OP/EXP	$23,343	$4,291	$0	$4,291	$0	$25,491	$0	$25,574
		OPERATING INCOME								
106220		Protect Env - Reimbursements WWLZ	($5,616)	($6,279)	($6,279)	$0	($7,489)	$0	($9,369)	$0
		Sub Total - PROTECTION OF THE ENVIRONMENT OP/INC	($5,616)	($6,279)	($6,279)	$0	($7,489)	$0	($9,369)	$0
		Total - PROTECTION OF THE ENVIRONMENT	$17,727	($1,988)	($6,279)	$4,291	($7,489)	$25,491	($9,369)	$25,574
		TOWN PLANNING & REGIONAL DEVELOPMENT								
		OPERATING EXPENDITURE								
104000		Town Planning - Allocation of Admin Overheads	$30,186	$16,893	$0	$16,893	$0	$40,257	$0	$40,397
		Sub Total - TOWN PLAN & REG DEV OP/EXP	$30,186	$16,893	$0	$16,893	$0	$40,257	$0	$40,397
		OPERATING INCOME								
104200		Town Planning - Town Planning Application Fee	($600)	($3,378)	($3,378)	$0	($1,200)	$0	($2,383)	$0
		Sub Total - TOWN PLAN & REG DEV OP/INC	($600)	($3,378)	($3,378)	$0	($1,200)	$0	($2,383)	$0
		Total - TOWN PLANNING & REGIONAL DEVELOPMENT	$29,586	$13,515	($3,378)	$16,893	($1,200)	$40,257	($2,383)	$40,397

SHIRE OF WOODANILLING
MONTHLY FINANCIAL REPORT

G/L	JOB	Details By Function Under The Following Program Titles And Type Of Activities Within The Programme	CURRENT YEAR COMPARATIVES 31 MARCH 2025 Budget	Actual	CURRENT YEAR 31 MARCH 2025 Income	Expenditure	ADOPTED BUDGET 2024-25 Income	Expenditure	AMENDED BUDGET 30 JUNE 2025 Income	Expenditure
		OTHER COMMUNITY AMENITIES								
		OPERATING EXPENDITURE								
105000		Other Community Amenities - Expenses Relating to Other Community	$40,899	$27,436	$0	$27,436	$0	$54,557	$0	$55,695
105020		Other Community Amenities - Maintenance - Cemetery	$4,003	$7,244	$0	$7,244	$0	$5,668	$0	$11,350
105030		Other Community Amenities - Maintenance - Grave Digging	$2,979	$0	$0	$0	$0	$3,975	$0	$2,700
105060		Other Community Amenities - Depreciation Other infrastructure	$863	$0	$0	$0	$0	$1,150	$0	$1,150
		Sub Total - OTHER COMMUNITY AMENITIES OP/EXP	$48,744	$34,680	$0	$34,680	$0	$65,350	$0	$70,895
		OPERATING INCOME								
105200		Other Community Amenities - Income Relating to Cemetery	($750)	($2,495)	($2,495)	$0	($1,500)	$0	($2,495)	$0
		Sub Total - OTHER COMMUNITY AMENITIES OP/INC	($750)	($2,495)	($2,495)	$0	($1,500)	$0	($2,495)	$0
		Total - OTHER COMMUNITY AMENITIES	$47,994	$32,185	($2,495)	$34,680	($1,500)	$65,350	($2,495)	$70,895
		STORMWATER DRAINAGE								
		OPERATING EXPENDITURE								
102000		Stormwater Drainage - Expenses Relating to Urban Stormwater Drain	$639	$470	$0	$470	$0	$938	$0	$957
		Sub Total - URBAN STORMWATER DRAINAGE OP/EXP	$639	$470	$0	$470	$0	$938	$0	$957
		OPERATING INCOME								
102200		Stormwater Drainage - Income Relating to Urban Stormwater Drainag	$0	$0	$0	$0	($40,014)	$0	($40,014)	$0
		Sub Total - URBAN STORMWATER DRAINAGE OP/INC	$0	$0	$0	$0	($40,014)	$0	($40,014)	$0
		Total - URBAN STORMWATER DRAINAGE	$639	$470	$0	$470	($40,014)	$938	($40,014)	$957
		Total - COMMUNITY AMENITIES	**$149,624**	**$108,790**	**($70,591)**	**$179,380**	**($109,668)**	**$275,083**	**($112,998)**	**$294,135**

SHIRE OF WOODANILLING
MONTHLY FINANCIAL REPORT

G/L	JOB	Details By Function Under The Following Program Titles And Type Of Activities Within The Programme	CURRENT YEAR COMPARATIVES 31 MARCH 2025 Budget	Actual	CURRENT YEAR 31 MARCH 2025 Income	Expenditure	ADOPTED BUDGET 2024-25 Income	Expenditure	AMENDED BUDGET 30 JUNE 2025 Income	Expenditure
		PUBLIC HALL & CIVIC CENTRES								
		OPERATING EXPENDITURE								
110000		Expenses Relating to Town Halls & Civic Centres	$44,791	$20,954	$0	$20,954	$0	$56,970	$0	$54,533
		Sub Total - PUBLIC HALLS & CIVIC CENTRES OP/EXP	$44,791	$20,954	$0	$20,954	$0	$56,970	$0	$54,533
		OPERATING INCOME								
110200		Public Halls - Income Relating to Town Hall & Other Civic Centres	($250)	($214)	($214)	$0	($250)	$0	($250)	$0
		Sub Total - PUBLIC HALLS & CIVIC CENTRES OP/INC	($250)	($214)	($214)	$0	($250)	$0	($250)	$0
		Total - PUBLIC HALL & CIVIC CENTRES	$44,541	$20,740	($214)	$20,954	($250)	$56,970	($250)	$54,533
		OTHER RECREATION & SPORT								
		OPERATING EXPENDITURE								
113000		Other Recreation - Expenses Relating to Other Recreation & Sport	$75,095	$39,711	$0	$39,711	$0	$98,559	$0	$99,564
113010		Other Recreation - Maintenance - Parks & Reserves	$15,602	$11,550	$0	$11,550	$0	$19,980	$0	$20,012
113020		Other Recreation - Maintenance - Oval & Buildings	$71,877	$55,975	$0	$55,975	$0	$89,710	$0	$109,536
113030		Other Recreation - Maintenance - Golf Club	$8,059	$6,863	$0	$6,863	$0	$9,515	$0	$11,763
113040		Other Recreation - Depreciation - Buildings	$2,097	$0	$0	$0	$0	$2,795	$0	$2,795
113050		Other Recreation - Depreciation - Parks	$11,810	$0	$0	$0	$0	$15,750	$0	$15,750
		Sub Total - OTHER RECREATION & SPORT OP/EXP	$184,540	$114,099	$0	$114,099	$0	$236,309	$0	$259,420
		OPERATING INCOME								
113200		Other Recreation - Income Relating to Other Recreation & Sport	($1,425)	($1,429)	($1,429)	$0	($1,500)	$0	($1,500)	$0
113210		Other Sport & Recreation Fees & Charges Income	($1,045)	($1,950)	($1,950)	$0	($1,100)	$0	($2,600)	$0
		Sub Total - OTHER RECREATION & SPORT OP/INC	($2,470)	($3,379)	($3,379)	$0	($2,600)	$0	($4,100)	$0
		Total - OTHER RECREATION & SPORT	$182,070	$110,720	($3,379)	$114,099	($2,600)	$236,309	($4,100)	$259,420

SHIRE OF WOODANILLING
MONTHLY FINANCIAL REPORT

G/L	JOB	Details By Function Under The Following Program Titles And Type Of Activities Within The Programme	CURRENT YEAR COMPARATIVES 31 MARCH 2025 Budget	Actual	CURRENT YEAR 31 MARCH 2025 Income	Expenditure	ADOPTED BUDGET 2024-25 Income	Expenditure	AMENDED BUDGET 30 JUNE 2025 Income	Expenditure
		SWIMMING AREAS & BEACHES								
		OPERATING EXPENDITURE								
111000		Swim Areas - Expenses Relating to Queerearrup Lake	$5,605	$2,074	$0	$2,074	$0	$7,543	$0	$7,510
111010		Swim Areas - Depreciation	$2,154	$0	$0	$0	$0	$2,875	$0	$2,875
		Sub Total - SWIMMING AREAS OP/EXP	$7,759	$2,074	$0	$2,074	$0	$10,418	$0	$10,385
		OPERATING INCOME								
		Sub Total - SWIMMING AREAS OP/INC	$0	$0	$0	$0	$0	$0	$0	$0
		Total - SWIMMING AREAS & BEACHES	$7,759	$2,074	$0	$2,074	$0	$10,418	$0	$10,385
		LIBRARIES								
		OPERATING EXPENDITURE								
114000		Library - Administration Allocations	$3,106	$1,856	$0	$1,856	$0	$3,809	$0	$3,884
		Sub Total - LIBRARIES OP/EXP	$3,106	$1,856	$0	$1,856	$0	$3,809	$0	$3,884
		OPERATING INCOME								
		Sub Total - LIBRARIES OP/INC	$0	$0	$0	$0	$0	$0	$0	$0
		Total - LIBRARIES	$3,106	$1,856	$0	$1,856	$0	$3,809	$0	$3,884

SHIRE OF WOODANILLING
MONTHLY FINANCIAL REPORT

G/L	JOB	Details By Function Under The Following Program Titles And Type Of Activities Within The Programme	CURRENT YEAR COMPARATIVES 31 MARCH 2025 Budget	Actual	CURRENT YEAR 31 MARCH 2025 Income	Expenditure	ADOPTED BUDGET 2024-25 Income	Expenditure	AMENDED BUDGET 30 JUNE 2025 Income	Expenditure
		OTHER CULTURE								
		OPERATING EXPENDITURE								
115000		Other Culture - Expenses Relating to Other Culture	$2,960	$2,559	$0	$2,559	$0	$5,257	$0	$5,448
115100		Other Culture - Expenses Relating to War Memorial	$1,053	$205	$0	$205	$0	$1,400	$0	$1,400
115101		Other Culture - Depreciation	$1,117	$0	$0	$0	$0	$1,490	$0	$1,490
115102		Other Culture - Depreciation - Buildings	$46	$0	$0	$0	$0	$62	$0	$62
		Sub Total - OTHER CULTURE OP/EXP	$5,176	$2,764	$0	$2,764	$0	$8,209	$0	$8,400
		OPERATING INCOME								
115220		Other Culture - Sale of History Books & DVD's	($75)	($22)	($22)	$0	($75)	$0	($75)	$0
		Sub Total - OTHER CULTURE OP/INC	($75)	($22)	($22)	$0	($75)	$0	($75)	$0
		Total - OTHER CULTURE	$5,101	$2,742	($22)	$2,764	($75)	$8,209	($75)	$8,400
		Total - RECREATION AND CULTURE	**$242,577**	**$138,133**	**($3,614)**	**$141,747**	**($2,925)**	**$315,715**	**($4,425)**	**$336,622**

SHIRE OF WOODANILLING
MONTHLY FINANCIAL REPORT

G/L	JOB	Details By Function Under The Following Program Titles And Type Of Activities Within The Programme	CURRENT YEAR COMPARATIVES 31 MARCH 2025 Budget	Actual	CURRENT YEAR 31 MARCH 2025 Income	Expenditure	ADOPTED BUDGET 2024-25 Income	Expenditure	AMENDED BUDGET 30 JUNE 2025 Income	Expenditure
		STREETS, RD, BRIDGES, DEPOT - CONSTRUCTION								
		OPERATING INCOME								
122240		Transport - Regional Road Group Grants	($527,876)	($74,362)	($74,362)	$0	($527,881)	$0	($527,881)	$0
122229		Transport - Commodity Route Grants	($108,901)	($43,568)	($43,568)	$0	($108,902)	$0	($108,902)	$0
122270		Transport - Roads to Recovery Grant	($363,515)	($427,130)	($427,130)	$0	($511,880)	$0	($511,880)	$0
122220		Transport - Grant - LCRI	$0	$0	$0	$0	$0	$0		
		Sub Total - ST,RDS,BRIDGES,DEPOT - CONST OP/INC	($1,000,292)	($545,060)	($545,060)	$0	($1,148,663)	$0	($1,148,663)	$0
		Total - ST,RDS,BRIDGES,DEPOT - CONST	($1,000,292)	($545,060)	($545,060)	$0	($1,148,663)	$0	($1,148,663)	$0
		STREETS,ROADS, BRIDGES, DEPOTS - MAINTENANCE								
		OPERATING EXPENDITURE								
122000		Transport - Expenses Relating to Streets, Roads, Bridges & Depot Ma	$1,483,650	$284,814	$0	$284,814	$0	$1,977,590	$0	$1,990,233
122010		Transport - Street Lighting	$5,850	$5,472	$0	$5,472	$0	$7,800	$0	$7,800
122020		Transport - Maintenance - Direct Grants	$23,715	$4,955	$0	$4,955	$0	$31,625	$0	$23,000
122030		Transport - Maintenance - Muni Fund Roads	$558,543	$363,496	$0	$363,496	$0	$725,641	$0	$613,426
122040		Transport - Expenses relating to the Shire Depot	$37,934	$156,484	$0	$156,484	$0	$49,745	$0	$51,273
122050		Transport - Maintenance - Footpaths	$8,000	$0	$0	$0	$0	$8,000	$0	$8,000
122060		Transport - Maintenance - Traffic Signs	$2,503	$5,701	$0	$5,701	$0	$3,000	$0	$4,890
122061		Transport - Rural Street Address Expenses	$0	$55	$0	$55	$0	$0	$0	$55
122070		Transport - Maintenance - Bridges	$5,000	$0	$0	$0	$0	$5,000	$0	$5,000
123410		Transport - Expenses Relating to Road Plant Purchases	$0	$0	$0	$0	$0	$0	$0	$0
123411		Road Plant Purchases Minor Expenses	$0	$1,140	$0	$1,140	$0	$0	$0	$1,140
		Sub Total - MTCE STREETS ROADS DEPOTS OP/EXP	$2,125,195	$822,118	$0	$822,118	$0	$2,808,401	$0	$2,704,817
		OPERATING INCOME								
122230		Transport - Grant - RRG Direct	($96,130)	($118,302)	($118,302)	$0	($96,130)	$0	($118,302)	$0
122261		Transport - Rural Street Address Income	$0	($90)	($90)	$0	$0	$0	($90)	$0
122299		Transport - Profit on disposal of assets	$0	$0	$0	$0	$0	$0	$0	$0
		Sub Total - MTCE STREETS ROADS DEPOTS OP/INC	($96,130)	($118,392)	($118,392)	$0	($96,130)	$0	($118,392)	$0
		Total - MTCE STREETS ROADS DEPOTS	$2,029,065	$703,726	($118,392)	$822,118	($96,130)	$2,808,401	($118,392)	$2,704,817

SHIRE OF WOODANILLING
MONTHLY FINANCIAL REPORT

G/L	JOB	Details By Function Under The Following Program Titles And Type Of Activities Within The Programme	CURRENT YEAR COMPARATIVES 31 MARCH 2025 Budget	Actual	CURRENT YEAR 31 MARCH 2025 Income	Expenditure	ADOPTED BUDGET 2024-25 Income	Expenditure	AMENDED BUDGET 30 JUNE 2025 Income	Expenditure
		TRANSPORT LICENSING								
		OPERATING EXPENDITURE								
125000		Transport - Expenses Relating to Transport Licensing	$5,724	$4,289	$0	$4,289	$0	$7,633	$0	$7,810
125010		Transport - Licensing Payments	$74,970	$93,797	$0	$93,797	$0	$100,000	$0	$100,000
		Sub Total - TRANSPORT LICENSING OP/EXP	$80,694	$98,086	$0	$98,086	$0	$107,633	$0	$107,810
		OPERATING INCOME								
125200		Transport - Income Relating to Transport Licensing	($2,628)	($5,311)	($5,311)	$0	($3,500)	$0	($3,665)	$0
125210		Transport - Licensing Receipts	($74,970)	($94,198)	($94,198)	$0	($100,000)	$0	($100,000)	$0
		Sub Total - TRANSPORT LICENSING OP/INC	($77,598)	($99,509)	($99,509)	$0	($103,500)	$0	($103,665)	$0
		Total - TRANSPORT LICENSING	$3,096	($1,423)	($99,509)	$98,086	($103,500)	$107,633	($103,665)	$107,810
		Total - TRANSPORT	**$1,031,869**	**$157,243**	**($762,961)**	**$920,204**	**($1,348,293)**	**$2,916,034**	**($1,370,720)**	**$2,812,627**

SHIRE OF WOODANILLING
MONTHLY FINANCIAL REPORT

G/L	JOB	Details By Function Under The Following Program Titles And Type Of Activities Within The Programme	CURRENT YEAR COMPARATIVES 31 MARCH 2025 Budget	Actual	CURRENT YEAR 31 MARCH 2025 Income	Expenditure	ADOPTED BUDGET 2024-25 Income	Expenditure	AMENDED BUDGET 30 JUNE 2025 Income	Expenditure
		RURAL SERVICES								
		OPERATING EXPENDITURE								
131000		Rural Srvcs - Administration Allocations	$2,151	$1,880	$0	$1,880	$0	$2,874	$0	$2,951
		Sub Total - RURAL SERVICES OP/EXP	$2,151	$1,880	$0	$1,880	$0	$2,874	$0	$2,951
		OPERATING INCOME								
		Sub Total - RURAL SERVICES OP/INC	$0	$0	$0	$0	$0	$0	$0	$0
		Total - RURAL SERVICES	$2,151	$1,880	$0	$1,880	$0	$2,874	$0	$2,951
		TOURISM AND AREA PROMOTION								
		OPERATING EXPENDITURE								
132000		Tourism - Expenses Relating to Tourism & Area Promotion	$13,485	$12,261	$0	$12,261	$0	$15,487	$0	$15,701
132020		Tourism - Expenses relating to Woody Wongi	$536	$1,207	$0	$1,207	$0	$575	$0	$1,850
		Sub Total - TOURISM & AREA PROMOTION OP/EXP	$14,021	$13,468	$0	$13,468	$0	$16,062	$0	$17,551
		OPERATING INCOME								
132220		Tourism - Income relating to Woody Wongi	($500)	($25)	($25)	$0	($500)	$0	($25)	$0
		Sub Total - TOURISM & AREA PROMOTION OP/INC	($500)	($25)	($25)	$0	($500)	$0	($25)	$0
		Total - TOURISM & AREA PROMOTION	$13,521	$13,443	($25)	$13,468	($500)	$16,062	($25)	$17,551

SHIRE OF WOODANILLING
MONTHLY FINANCIAL REPORT

G/L	JOB	Details By Function Under The Following Program Titles And Type Of Activities Within The Programme	CURRENT YEAR COMPARATIVES 31 MARCH 2025 Budget	Actual	CURRENT YEAR 31 MARCH 2025 Income	Expenditure	ADOPTED BUDGET 2024-25 Income	Expenditure	AMENDED BUDGET 30 JUNE 2025 Income	Expenditure
		BUILDING CONTROL								
		OPERATING EXPENDITURE								
133000		Building - Expenses Relating to Building Control	$24,327	$14,730	$0	$14,730	$0	$32,451	$0	$33,052
		Sub Total - BUILDING CONTROL OP/EXP	$24,327	$14,730	$0	$14,730	$0	$32,451	$0	$33,052
		BUILDING CONTROL OP/INC								
133210		Building - Building Permit Application Fee	($870)	($1,461)	($1,461)	$0	($1,000)	$0	($1,000)	$0
133220		Building - Building Services Levy	$0	$0	$0	$0	$0	$0	$0	$0
133221		Building - Building Services Levy Commission	$0	$0	$0	$0	$0	$0	$0	$0
133230		Building - Building Construction Industry Training Fund (BCITF)	$0	($730)	($730)	$0	$0	$0	$0	$0
133231		Building - BCITF Commission	$0	$0	$0	$0	$0	$0	$0	$0
		Sub Total - BUILDING CONTROL OP/INC	($870)	($2,191)	($2,191)	$0	($1,000)	$0	($1,000)	$0
		Total - BUILDING CONTROL	$23,457	$12,539	($2,191)	$14,730	($1,000)	$32,451	($1,000)	$33,052
		OTHER ECONOMIC SERVICES								
		OPERATING EXPENDITURE								
135000		Other Economic - Expenses Relating to Economic Services	$5,328	$4,582	$0	$4,582	$0	$7,103	$0	$7,293
135010		Other Economic - Expenses Relating to Standpipes	$30,632	$53,155	$0	$53,155	$0	$39,200	$0	$39,934
135020		Other Economic - Depreciation	$875	$0	$0	$0	$0	$1,170	$0	$1,170
		Sub Total - OTHER ECONOMIC SERVICES OP/EXP	$36,835	$57,738	$0	$57,738	$0	$47,473	$0	$48,397
		OPERATING INCOME								
135015		Other Economic - Income Relating to Pool Inspections	($550)	($534)	($534)	$0	($550)	$0	($585)	$0
135210		Other Economic - Income Relating to Standpipes	($3,740)	($78,333)	($78,333)	$0	($34,000)	$0	($34,000)	$0
		Sub Total - OTHER ECONOMIC SERVICES OP/INC	($4,290)	($78,868)	($78,868)	$0	($34,550)	$0	($34,585)	$0
		Total - OTHER ECONOMIC SERVICES	$32,545	($21,130)	($78,868)	$57,738	($34,550)	$47,473	($34,585)	$48,397
		Total - ECONOMIC SERVICES	**$71,674**	**$6,732**	**($81,084)**	**$87,816**	**($36,050)**	**$98,860**	**($35,610)**	**$101,951**

SHIRE OF WOODANILLING
MONTHLY FINANCIAL REPORT

G/L	JOB	Details By Function Under The Following Program Titles And Type Of Activities Within The Programme	CURRENT YEAR COMPARATIVES 31 MARCH 2025 Budget	Actual	CURRENT YEAR 31 MARCH 2025 Income	Expenditure	ADOPTED BUDGET 2024-25 Income	Expenditure	AMENDED BUDGET 30 JUNE 2025 Income	Expenditure
		PRIVATE WORKS								
		OPERATING EXPENDITURE								
141000		Private Works - Expenses	$2,422	$876	$0	$876	$0	$2,672	$0	$504
		Sub Total - PRIVATE WORKS OP/EXP	$2,422	$876	$0	$876	$0	$2,672	$0	$504
		OPERATING INCOME								
141010		Private Works - Fees & Charges	($1,361)	($740)	($740)	$0	($1,375)	$0	($260)	$0
		Sub Total - PRIVATE WORKS OP/INC	($1,361)	($740)	($740)	$0	($1,375)	$0	($260)	$0
		Total - PRIVATE WORKS	$1,061	$136	($740)	$876	($1,375)	$2,672	($260)	$504
		PUBLIC WORKS OVERHEADS								
		OPERATING EXPENDITURE								
143000		Public Works - Expenses Relating to Public Works Overheads	$23,949	$23,145	$0	$23,145	$0	$31,944	$0	$36,569
143005		Public Works - Supervision Salaries	$93,339	$38,031	$0	$38,031	$0	$124,500	$0	$124,500
143011		Public Works - Superannuation	$70,785	$55,025	$0	$55,025	$0	$94,413	$0	$74,794
143012		Public Works - Unallocated Wages	$0	$903	$0	$903	$0	$0	$0	$630
143020		Public Works - Public Holidays, Annual & Long Service Leave	$51,600	$30,886	$0	$30,886	$0	$86,000	$0	$40,000
143030		Public Works - Protective Clothing	$6,000	$1,351	$0	$1,351	$0	$10,000	$0	$5,000
143070		Public Works - Works Crew Staff Training	$18,550	$5,695	$0	$5,695	$0	$26,500	$0	$22,195
143080		Public Works - Workers Compensation Insurance	$26,430	$23,413	$0	$23,413	$0	$26,430	$0	$23,413
143090		Public Works - Expenses Relating to Occ Safety & Health	$7,224	$9,607	$0	$9,607	$0	$10,320	$0	$17,198
143050		Less: Allocation of Public Works Overheads	($307,458)	($298,288)	$0	($298,288)	$0	($410,107)	$0	($344,299)
		Sub Total - PUBLIC WORKS O/HEADS OP/EXP	($9,581)	($110,231)	$0	($110,231)	$0	$0	$0	$0
		OPERATING INCOME								
143200		FBT Reimbursements - Public Works Overheads	$0	($1,170)	($1,170)	$0	$0	$0	($810)	$0
143210		Public Works - Workers Compensation Reimbursements	$0	($16,143)	($16,143)	$0	$0	$0	($17,386)	$0
		Sub Total - PUBLIC WORKS O/HEADS OP/INC	$0	($17,313)	($17,313)	$0	$0	$0	($18,196)	$0
		Total - PUBLIC WORKS OVERHEADS	($9,581)	($127,544)	($17,313)	($110,231)	$0	$0	($18,196)	$0

SHIRE OF WOODANILLING
MONTHLY FINANCIAL REPORT

G/L	JOB	Details By Function Under The Following Program Titles And Type Of Activities Within The Programme	CURRENT YEAR COMPARATIVES 31 MARCH 2025 Budget	Actual	CURRENT YEAR 31 MARCH 2025 Income	Expenditure	ADOPTED BUDGET 2024-25 Income	Expenditure	AMENDED BUDGET 30 JUNE 2025 Income	Expenditure
		PLANT OPERATIONS COSTS								
		OPERATING EXPENDITURE								
144000		Plant Operation - Insurances	$14,220	$12,997	$0	$12,997	$0	$14,220	$0	$12,997
144010		Plant Operation - Fuels & Oils	$111,000	$71,555	$0	$71,555	$0	$150,000	$0	$93,000
144020		Plant Operation - Tyres & Tubes	$22,500	$12,206	$0	$12,206	$0	$30,000	$0	$20,000
144030		Plant Operation - Parts & Repairs	$74,000	$48,839	$0	$48,839	$0	$100,000	$0	$100,000
144040		Plant Operation - Blades & Tynes	$8,000	$1,250	$0	$1,250	$0	$8,000	$0	$8,000
144050		Minor Equipment Purchases	$6,000	$995	$0	$995	$0	$7,500	$0	$7,500
144060		Plant Operation - Repairs - Wages	$3,753	$1,635	$0	$1,635	$0	$5,000	$0	$5,000
144070		Plant Operation - Licences	$8,000	$7,429	$0	$7,429	$0	$8,000	$0	$8,000
144080		Plant Operation - Depreciation	$88,526	$0	$0	$0	$0	$118,060	$0	$118,060
144100		Plant Operation - Less Depreciation Allocated	($88,506)	($62,601)	$0	($62,601)	$0	($118,060)	$0	($118,060)
144090		Plant Operation - Less Allocated to Works/SRVCS	($241,947)	($117,202)	$0	($117,202)	$0	($322,720)	$0	($254,497)
		Sub Total - PLANT OPERATIONS COSTS OP/EXP	$5,546	($22,897)	$0	($22,897)	$0	$0	$0	$0
		OPERATING INCOME								
144004		Plant Operating Reimbursement Income	$0	($281)	($281)	$0				
144005		Plant Operation - Diesel Fuel Rebate	($12,744)	($10,429)	($10,429)	$0	($17,000)	$0	($10,000)	$0
144006		Insurance Refunds on Motor Vehicle Claims	$0	$0	$0	$0	$0	$0	$0	$0
		Sub Total - PLANT OPERATIONS COSTS OP/INC	($12,744)	($10,710)	($10,710)	$0	($17,000)	$0	($10,000)	$0
		Total - PLANT OPERATIONS COSTS	($7,198)	($33,608)	($10,710)	($22,897)	($17,000)	$0	($10,000)	$0

SHIRE OF WOODANILLING
MONTHLY FINANCIAL REPORT

G/L	JOB	Details By Function Under The Following Program Titles And Type Of Activities Within The Programme	CURRENT YEAR COMPARATIVES 31 MARCH 2025 Budget	Actual	CURRENT YEAR 31 MARCH 2025 Income	Expenditure	ADOPTED BUDGET 2024-25 Income	Expenditure	AMENDED BUDGET 30 JUNE 2025 Income	Expenditure
		SALARIES AND WAGES								
		OPERATING EXPENDITURE								
147000		Gross Salaries & Wages	$873,342	$756,184	$0	$756,184	$0	$1,164,925	$0	$1,044,635
147010		Less Salaries & Wages Allocated	($873,342)	($748,895)	$0	($748,895)	$0	($1,164,925)	$0	($1,044,635)
		Sub Total - SALARIES AND WAGES OP/EXP	$0	$7,289	$0	$7,289	$0	$0	$0	$0
		OPERATING INCOME								
			$0	$0	$0	$0	$0	$0	$0	$0
		Sub Total - SALARIES AND WAGES OP/INC	$0	$0	$0	$0	$0	$0	$0	$0
		Total - SALARIES AND WAGES	$0	$7,289	$0	$7,289	$0	$0	$0	$0
		Total - OTHER PROPERTY AND SERVICES	**($15,718)**	**($153,726)**	**($28,763)**	**($124,963)**	**($18,375)**	**$2,672**	**($28,456)**	**$504**

SHIRE OF WOODANILLING
MONTHLY FINANCIAL REPORT

G/L	JOB	Details By Function Under The Following Program Titles And Type Of Activities Within The Programme	CURRENT YEAR COMPARATIVES 31 MARCH 2025 Budget	Actual	CURRENT YEAR 31 MARCH 2025 Income	Expenditure	ADOPTED BUDGET 2024-25 Income	Expenditure	AMENDED BUDGET 30 JUNE 2025 Income	Expenditure
		TRANSFERS TO/FROM RESERVES								
		EXPENDITURE								
		Transfer to Affordable Housing Reserve	$738	$1,086	$0	$1,086	$0	$990	$0	$1,653
007152		Transfer to Plant Replacement Reserve	$5,922	$7,465	$0	$7,465	$0	$80,571	$0	$85,864
		Transfer to Building Reserve	$279	$969	$0	$969	$0	$130,851	$0	$131,099
		Transfer to Town Development Reserve	$0	$0	$0	$0	$0	$0	$0	$0
		Transfer to Office Equipment Reserve	$108	$149	$0	$149	$0	$26,551	$0	$26,645
		Transfer to Road Construction Reserve	$153	$230	$0	$230	$0	$200	$0	$334
		Transfer to Staff Leave Reserve	$297	$735	$0	$735	$0	$400	$0	$668
		Sub Total - TRANSFER TO OTHER COUNCIL FUNDS	$7,497	$10,633	$0	$10,633	$0	$239,563	$0	$246,263
		INCOME								
		Transfer from Affordable Housing Reserve	$0	$0	$0	$0	($105,481)	$0	($105,481)	$0
007161		Transfer from Building Reserve	$0	$0	$0	$0	$0	$0	($20,000)	$0
		Sub Total - TRANSFER FROM RESERVE FUNDS	$0	$0	$0	$0	($105,481)	$0	($125,481)	$0
		Total - FUND TRANSFER	**$7,497**	**$10,633**	**$0**	**$10,633**	**($105,481)**	**$239,563**	**($125,481)**	**$246,263**
		000000 (Surplus) / Deficit - Carried Forward	($1,229,900)	($1,354,241)	($1,354,241)	$0	($1,229,900)	$0	($1,354,241)	$0
		000000 adjust to rates levied					$0		$0	
		Sub Total - SURPLUS C/FWD	($1,229,900)	($1,354,241)	($1,354,241)	$0	($1,229,900)	$0	($1,354,241)	$0
		Total - SURPLUS	**($1,229,900)**	**($1,354,241)**	**($1,354,241)**	**$0**	**($1,229,900)**	**$0**	**($1,354,241)**	**$0**

SHIRE OF WOODANILLING
MONTHLY FINANCIAL REPORT

G/L	JOB	Details By Function Under The Following Program Titles And Type Of Activities Within The Programme	CURRENT YEAR COMPARATIVES 31 MARCH 2025 Budget	Actual	CURRENT YEAR 31 MARCH 2025 Income	Expenditure	ADOPTED BUDGET 2024-25 Income	Expenditure	AMENDED BUDGET 30 JUNE 2025 Income	Expenditure
		OPERATING ACTIVITIES EXCLUDED FROM BUDGET								
		000000 Depreciation Written Back	($1,364,422)	$0	$0	$0	$0	($1,819,595)	$0	($1,819,595)
		000000 Book Value of Assets Sold Written Back	($8,900)	$0	$0	$0	$0	($8,900)	$0	($7,957)
		00000 Profit on Sale of Asset Written Back	$0	$0	$0	$0	$0	$0	$0	$0
		00000 Loss on Sale of Asset Written Back	$0	$0	$0	$0	$0	$0	$0	$0
		000000 LG House Unit Trust	$0	$0	$0	$0	$0	$0	$0	$0
		000000 Movement in LSL Reserve (Added Back)	$0	$0	$0	$0	$0	$0	$0	$0
		000000 Movement in Non-Current Leave Provisions	$0	$0	$0	$0	$0	$0		
		Sub Total - ITEMS EXCLUDED	($1,373,322)	$0	$0	$0	$0	($1,828,495)	$0	($1,827,552)
		Total - OPERATING ACTIVITIES EXCLUDED	**($1,373,322)**	**$0**	**$0**	**$0**	$0	($1,828,495)	$0	($1,827,552)

SHIRE OF WOODANILLING
MONTHLY FINANCIAL REPORT

G/L	JOB	Details By Function Under The Following Program Titles And Type Of Activities Within The Programme	CURRENT YEAR COMPARATIVES 31 MARCH 2025 Budget	Actual	CURRENT YEAR 31 MARCH 2025 Income	Expenditure	ADOPTED BUDGET 2024-25 Income	Expenditure	AMENDED BUDGET 30 JUNE 2025 Income	Expenditure
		FURNITURE & EQUIPMENT								
		GOVERNANCE - CAPITAL EXPENDITURE								
042310		Administration Furniture & Equipment	$33,700	$30,335	$0	$30,335	$0	$33,700	$0	$30,335
		Sub Total - CAPITAL WORKS	$33,700	$30,335	$0	$30,335	$0	$33,700	$0	$30,335
		Total - GOVERNANCE	$33,700	$30,335	$0	$30,335	$0	$33,700	$0	$30,335
		Total - FURNITURE AND EQUIPMENT	**$33,700**	**$30,335**	**$0**	**$30,335**	**$0**	**$33,700**	**$0**	**$30,335**
		BUILDINGS								
		HOUSING - CAPITAL EXPENDITURE								
091310		**Purchase Land & Buildings - Capital**								
091310	BC003	3347 Robinson Road Capital	$0	$0	$0	$0	$0	$0	$0	$0
091310	BC0	3327 Robinson Road Capital			$0	$0	$0	$0	$0	$20,000
		Sub Total - CAPITAL WORKS	$0	$0	$0	$0	$0	$0	$0	$20,000
		Total - HOUSING	$0	$0	$0	$0	$0	$0	$0	$20,000

SHIRE OF WOODANILLING
MONTHLY FINANCIAL REPORT

G/L	JOB	Details By Function Under The Following Program Titles And Type Of Activities Within The Programme	CURRENT YEAR COMPARATIVES 31 MARCH 2025 Budget	Actual	CURRENT YEAR 31 MARCH 2025 Income	Expenditure	ADOPTED BUDGET 2024-25 Income	Expenditure	AMENDED BUDGET 30 JUNE 2025 Income	Expenditure
		BUILDINGS								
		RECREATION AND CULTURE - CAPITAL EXPENDITURE								
110300		**Public Halls - Hall Building Capital Expenditure**								
110300	BC004	Town Hall Acess Railing	$5,000	$0	$0	$0	$0	$5,000	$0	$5,000
		Sub Total - CAPITAL WORKS	$5,000	$0	$0	$0	$0	$5,000	$0	$5,000
		Total - RECREATION AND CULTURE	$5,000	$0	$0	$0	$0	$5,000	$0	$5,000
		Total - BUILDINGS	**$5,000**	**$0**	**$0**	**$0**	**$0**	**$5,000**	**$0**	**$25,000**

SHIRE OF WOODANILLING
MONTHLY FINANCIAL REPORT

G/L	JOB	Details By Function Under The Following Program Titles And Type Of Activities Within The Programme	CURRENT YEAR COMPARATIVES 31 MARCH 2025 Budget	Actual	CURRENT YEAR 31 MARCH 2025 Income	Expenditure	ADOPTED BUDGET 2024-25 Income	Expenditure	AMENDED BUDGET 30 JUNE 2025 Income	Expenditure
		PLANT AND EQUIPMENT								
		LAW ORDER & PUBLIC SAFETY - CAPITAL EXPENDITURE								
053300	LRC319	Purchase Plant & Equipment - CAPITAL	$12,000	$2,180	$0	$2,180	$0	$12,000	$0	$12,000
		Sub Total - CAPITAL WORKS	$12,000	$2,180	$0	$2,180	$0	$12,000	$0	$12,000
		Total - LAW ORDER & PUBLIC SAFETY	$12,000	$2,180	$0	$2,180	$0	$12,000	$0	$12,000
		PLANT AND EQUIPMENT								
		TRANSPORT - CAPITAL EXPENDITURE								
123300		**Purchase Plant & Equipment - CAPITAL**	$0	$0	$0	$0	$0	$0	$0	$0
		Sub Total - CAPITAL WORKS	$0	$0	$0	$0	$0	$0	$0	$0
		Total - TRANSPORT	$0	$0	$0	$0	$0	$0	$0	$0
		Total - PLANT AND EQUIPMENT	**$12,000**	**$2,180**	**$0**	**$2,180**	**$0**	**$12,000**	**$0**	**$12,000**

SHIRE OF WOODANILLING
MONTHLY FINANCIAL REPORT

G/L	JOB	Details By Function Under The Following Program Titles And Type Of Activities Within The Programme	CURRENT YEAR COMPARATIVES 31 MARCH 2025 Budget	Actual	CURRENT YEAR 31 MARCH 2025 Income	Expenditure	ADOPTED BUDGET 2024-25 Income	Expenditure	AMENDED BUDGET 30 JUNE 2025 Income	Expenditure
		ROAD INFRASTRUCTURE								
		ROAD CONSTRUCTION - CAPITAL EXPENDITURE								
121310		**Road Construction - Regional Road Group**								
121310	RGA66	Robinson Rd West - Reconstruct, Widen & Seal Carry Over	$502,074	$70,228	$0	$70,228	$0	$502,075	$0	$575,000
121310	RRG67	RRG - Oxley Road	$301,927	$4,134	$0	$4,134	$0	$301,927	$0	$301,927
121320	x	**Road Construction - Roads to Recovery**								
121320	R2R35	RTR/LRCI4A - Burt Road	$170,000	$90,686	$0	$90,686	$0	$170,000	$0	$170,000
121320	R2R63	RTR - Oxley Road C/Over 23-24 (Pavement Repairs)	$353,942	$354,491	$0	$354,491	$0	$353,942	$0	$354,491
121320	R2R263	RTR - Oxley Road (Shoulder Rehab)	$24,690	$0	$0	$0	$0	$24,690	$0	$14,690
121320	R2R60	RTR - Youngs Road (Reform & Resheet)	$30,000	$22,641	$0	$22,641	$0	$30,000	$0	$30,000
121320	R2R73	RTR - Gorn Road	$15,000	$3,361	$0	$3,361	$0	$15,000	$0	$15,000
121320	R2R75	Robinson West Road (Shoulder Rehab)	$40,000	$5,305	$0	$5,305	$0	$40,000	$0	$30,000
121320	R2R76	Orchard Road Floodway	$50,000	$8,373	$0	$8,373	$0	$50,000	$0	$50,000
121315		**Commodity Routes Road Construction**								
121315	CRF01	CRF - Leggoe Road Construction	$163,353	$139,475	$0	$139,475	$0	$163,353	$0	$163,353
121340		**Road Construction - LRCI Roads**								
121340	LRC400	LRCI4B - Ashwell Road	$0	$2,058	$0	$2,058	$0	$51,500	$0	$51,500
121340	LRC401	LRCI4B - Dinwoodie Road	$23,190	$676	$0	$676	$0	$23,190	$0	$23,190
121340	LRC402	LRCI4B - Sandplain Road Floodway	$40,000	$676	$0	$676	$0	$40,000	$0	$40,000
121340	LRC403	LRCI4B - Douglas Road	$0	$45,406	$0	$45,406	$0	$20,000	$0	$20,000
		Sub Total - CAPITAL WORKS	$1,714,176	$747,511	$0	$747,511	$0	$1,785,677	$0	$1,839,151
		Total - ROADS	$1,714,176	$747,511	$0	$747,511	$0	$1,785,677	$0	$1,839,151
		Total - INFRASTRUCTURE ASSETS ROAD RESERVES	**$1,714,176**	**$747,511**	**$0**	**$747,511**	**$0**	**$1,785,677**	**$0**	**$1,839,151**

SHIRE OF WOODANILLING
MONTHLY FINANCIAL REPORT

G/L	JOB	Details By Function Under The Following Program Titles And Type Of Activities Within The Programme	CURRENT YEAR COMPARATIVES 31 MARCH 2025 Budget	Actual	CURRENT YEAR 31 MARCH 2025 Income	Expenditure	ADOPTED BUDGET 2024-25 Income	Expenditure	AMENDED BUDGET 30 JUNE 2025 Income	Expenditure
		DRAINAGE								
102300		**Purchase Drainage Infrastructure - Capital**								
102300	DWER1	Dwer Dam Project	$21,894	$27,377	$0	$27,377	$0	$66,345	$0	$66,345
		Sub Total - CAPITAL WORKS	$21,894	$27,377	$0	$27,377	$0	$66,345	$0	$66,345
		Total - TRANSPORT - DRAINAGE	$21,894	$27,377	$0	$27,377	$0	$66,345	$0	$66,345
		Total - DRAINAGE ASSETS	**$21,894**	**$27,377**	**$0**	**$27,377**	**$0**	**$66,345**	**$0**	**$66,345**
		INFRASTRUCTURE - PARKS & OVALS								
		COMMUNITY AMENITIES								
105040	LRC450	LRCI 4A - Woodanilling Townsite Enhancement	$105,000	$16,818	$0	$16,818	$0	$105,000	$0	$105,000
		Sub Total - CAPITAL WORKS	$105,000	$16,818	$0	$16,818	$0	$105,000	$0	$105,000
		Total - COMMUNITY AMENITIES	**$105,000**	**$16,818**	**$0**	**$16,818**	**$0**	**$105,000**	**$0**	**$105,000**
		Total - INFRASTRUCTURE ASSETS - OTHER	**$105,000**	**$16,818**	**$0**	**$16,818**	**$0**	**$105,000**	**$0**	**$105,000**
		GRAND TOTALS	$55,210	($1,233,502)	**($3,760,962)**	**$2,527,460**	**($4,789,740)**	**$4,789,740**	**($4,809,873)**	**$4,807,873**